Roll-Around Finishing Cabinet • Note Board
Accent Carving • Sanding Tips • Circle Sanding Jig

COMPLETE STEP-BY-STEP WOODWORKING PLANS

Woodsmith®

Vol. 16 / No. 96

Country Hutch

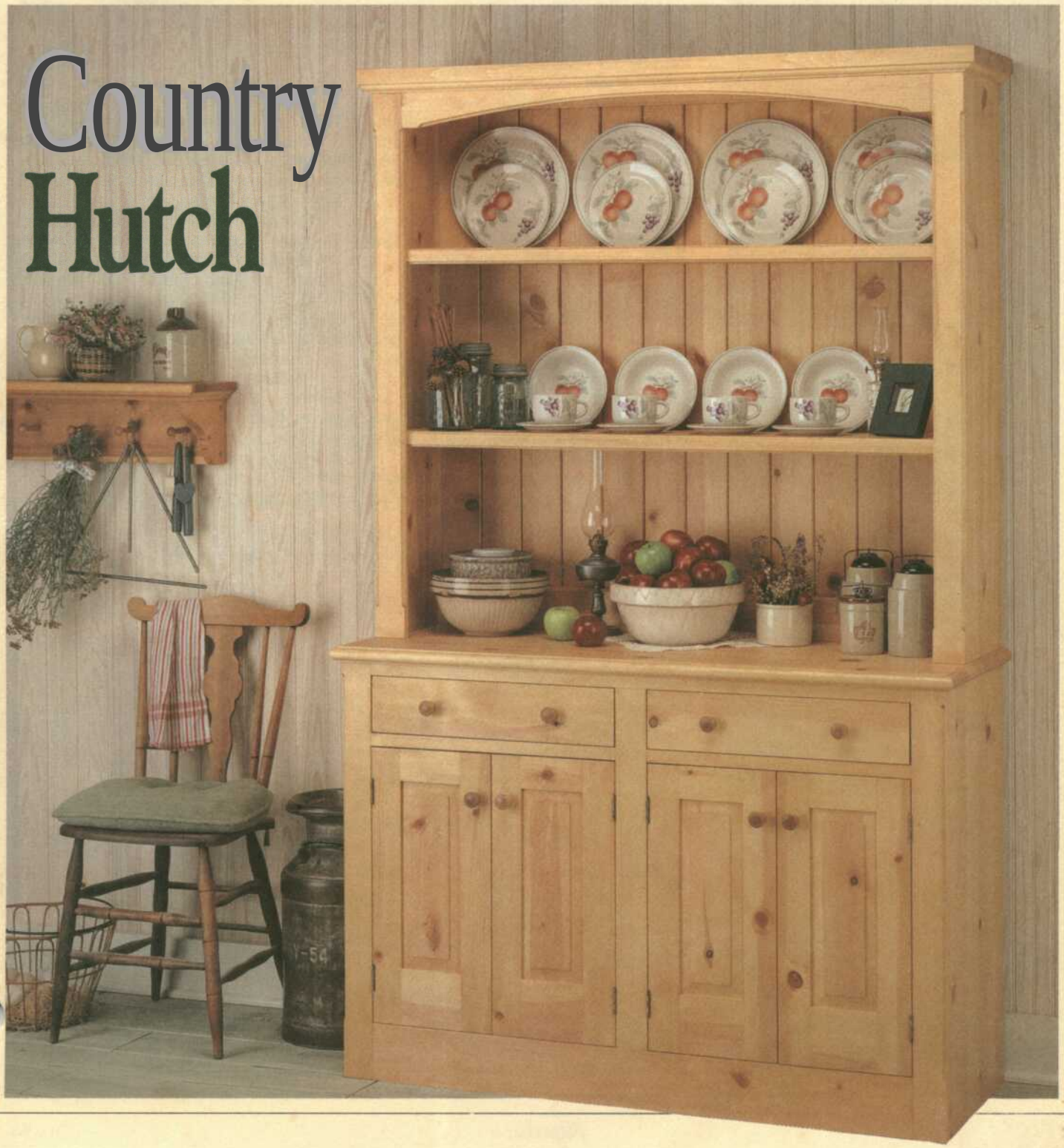

No. 96 December, 1994

Woodsmith®

Editor Donald B. Peschke
Executive Editor Douglas L. Hicks
Managing Editor Terry J. Strohman
Assistant Editors James M. Dolan, Jonathan Garbison, Mark A. Williams

Creative Director Ted Kralicek
Art Director Rod Stoakes
Senior Illustrators David Kreyling, Cinda Shambaugh
Illustrators Dirk Ver Steeg, Mark Higdon
Photographer Crayola England
Electronic Graphics Chris Glowacki
Design Director Ken Munkel
Senior Designer Kent Welsh
Shop Manager Steve Curtis
Shop Asst./Facilities Steve Johnson

Circulation Director Liz Bredeson
Subscription Manager Sandy Baum
Direct Mail Manager Troy J. Dowell
Newsstand Sales Kent A. Buckton

PUBLISHING SERVICES
Mgr: Gordon Gaippe • *Graph. Artist:* Cheryl L Cynor

CORPORATE SERVICES
Planning Director: Jon Macarthy • *Controller:* Robin Hutchinson • *Account.:* Laura Thomas • *Bookkeeping:* Julie Greenlee • *Production Mgr.:* Carol Quijano • *Info. Serv. Mgr.:* Joyce Moore • *Elec. Pub. Coord.:* Douglas M. Lidster • *Applic. Spec.:* Linda Morrow • *Sup. Asst:* Nick Thielen • *Admin. Assistants:* Cheryl A. Scott, Julia Fish • *Receptionist:* Jeanne Johnson • *Build. Maint.:* Ken Griffith

WOODSMITH MAIL ORDER
Art Dir.: Cindy Jackson • *Catalog Prod. Mgr.:* Bob Baker • *Inv. Control/Prod. Mgr.:* Mark Mattiussi • *Proj. Supplies:* Linda Jones • *Tech. Supp:* Jeff Janes

CUSTOMER SERVICE
Supervisor: Jennie Enos • *Customer Service Reps.:* Jennifer Murphy, Joy Krause, Sara Kono, Anna Cox, Lonnie Algreen, Karla Cronin

SHIPPING DEPARTMENT
Supr: Nancy Johnson • *Fulfillment* Gloria Sheehan, Chuck Carlson, Sylvia Carey, Larry Prine

WOODSMITH STORE
Manager: Dave Larson • *Assistant Manager:* Paul Schneider • *Sales Staff:* Wendell Stone, Pat Lowery • *Office Manager:* Vicki Edwards

Woodsmith® (ISSN 0164-4114) is published bimonthly (Feb., Apr., June, Aug., Oct., Dec.) by Woodsmith Corp., 2200 Grand, Des Moines, IA 50312.
Woodsmith® is a registered trademark of Woodsmith Corp. Copyright© 1994 Woodsmith Corporation. All rights reserved.
Subscriptions: Single copy: $3.95. One year subscription (6 issues), $19.95. Two years (12 issues), $35.95. (Canada/Foreign add $5 per year, U.S. funds.)
Second Class Postage Paid at Des Moines, IA and at additional offices.
Postmaster: Send change of address to *Woodsmith*, Box 10718, Des Moines, IA 50350.
Subscription Questions? Call **1-800-333-5075**, 8:00 am to 5:00 pm, Central Time, weekdays.
E-Mail. Prodigy: EDJE97A, CompuServe: 75330,2301, Internet 75330.2301@compuserve.com., America Online: Donpeschke.

E D I T O R ' S C O L U M N

Sawdust

It's the smell that does it Every time I start to work on a pine project it takes me back to the days when I first started woodworking.

To tell the truth, that was so many years ago I don't remember most of the projects I built. But I'll never forget the aroma that filled the air when I made my first cut into a piece of pine.

Like many beginning woodworkers I used pine because it was readily available. You could buy it at any lumberyard. And it was inexpensive. Something that was very important when you made as many mistakes as I did.

I still make mistakes (fortunately, not quite as many as I used to). But I never lost my affection for building pine projects.

Pine is still relatively inexpensive and readily available. But it's also versatile. In this issue all three projects, The Country Hutch on page 6, the Note Board on page 18, and the Finishing Cabinet on page 24, are built using pine lumber.

NEW LOOK. There's another thing I've gotten a little nostalgic about — the cover. I've always felt the cover of a magazine should reflect what's inside.

And while we've made several changes to the inside of *Woodsmith* over the years, the cover has remained basically the same. I knew that I wanted to make some changes but I kept putting it off.

It's sort of like staring at the same face in the mirror. You'd like to improve the way it looks. But you're a little worried that if you do, your friends won't recognize you.

Well we finally decided to quit putting it off and go ahead and make some changes. The biggest change we made was to the *Woodsmith* name on the cover.

We've also included a list of some of the projects and articles in the issue across the top of the cover. This allows you to tell at a glance what's inside.

NEW FACE. The cover of this issue isn't the only thing that's new around here. We've added another member to the *Woodsmith* family. Troy Dowell has joined us as direct mail manager. Troy will be working in our circulation department and will try to make sense out of all the names and numbers.

PUBLISHER'S STATEMENT. Speaking of numbers, once a year the post office requires that we print a Publisher's Statement, see below. It has a lot of numbers in it, but the good news is we continue to grow. For being part of this growth and for your continued support, I thank you.

STATEMENT OF OWNERSHIP, MANAGEMENT AND CIRCULATION
(Required by 39 U.S.C. 3685)

1. Title of Publication: Woodsmith. la. Publication No.: 0164-4114. 2. Date of Filing: September 1, 1994. 3. Frequency of issue: Bimonthly. 3a. No. of issues published annually: 6 (six). 3b. Annual subscription price: $19.95. 4. Complete mailing address of known office of publication. 2200 Grand Avenue, Des Moines, (Polk County), Iowa 50312-5306. 5. Complete mailing address of the headquarters of general business offices of the publisher: 2200 Grand Avenue, Des Moines, Iowa 50312-5306. 6. Full names and complete mailing address of publisher, editor, and managing editor: Publisher and Editor: Donald B. Peschke, 2200 Grand Avenue, Des Moines, Iowa 50312; Managing Editor: Terry J. Strohman, 2200 Grand Avenue, Des Moines, Iowa 50312. 7. Owner: Woodsmith Corporation, 2200 Grand Avenue, Des Moines, Iowa 50312; Donald B. Peschke, 2200 Grand Avenue, Des Moines, Iowa 50312. 8. Known bondholders, mortgagees, and other security holders owning 1 percent or more of total amount of bonds, mortgages or other securities: None. 9. (Does not apply.) 10. Extent and nature of circulation:

	Average no. copies each issue during preceding 12 months	Average no. copies of single issue published nearest to filing date
A Total no. copies printed (net press run)	432,508	461,715
B. Paid and/or requested circulation:		
1. Sales through dealers, street vendors and counter sales	23,777	37,147
2. Mail subscriptions (paid and/or requested)	374,954	395,264
C. Total paid and/or requested circulation	398,731	432,411
D. Free distribution by mail, carrier or other means, samples, complimentary, and other free copies	111	106
E. Total distribution	398,842	432,517
F. Copies not distributed		
1. Office use, left over, unaccounted, spoiled after printing	13,845	22,359
2. Returns from news agents	19,821	6,839
G. Total	432,508	461,715

11. I certify that the statements made by me above are correct and complete.
(signed) Donald B. Peschke, Editor

Contents

FEATURES

Country Hutch 6

Simple design and basic joinery make this Hutch easy to build. Knotty pine boards give it a country appearance and keep it affordable, too.

Note Board 18

Make this Note Board to fit your favorite calendar. Then add an angled shelf to hold a notepad, with a lip on the front to keep writing tools from rolling off.

Accent Carving 20

This carving technique is easy to master by following our step-by-step drawings. Also, tips for choosing the best wood, laying out the pattern, and producing clean, crisp details.

Sanding Tips 22

A collection of practical sanding tips to help you produce more professional finishes every time, with less work.

Finishing Cabinet 24

A roll-around cabinet that makes the job of finishing more convenient. The top revolves on a shop-made "lazy susan."

Circle Sanding Jig 30

Produce perfectly round — and smooth — circles using this jig on a disc sander. It's easily adjustable to a range of sizes.

DEPARTMENTS

Tips & Techniques 4

Shop Notes 16

Talking Shop 29

Sources 31

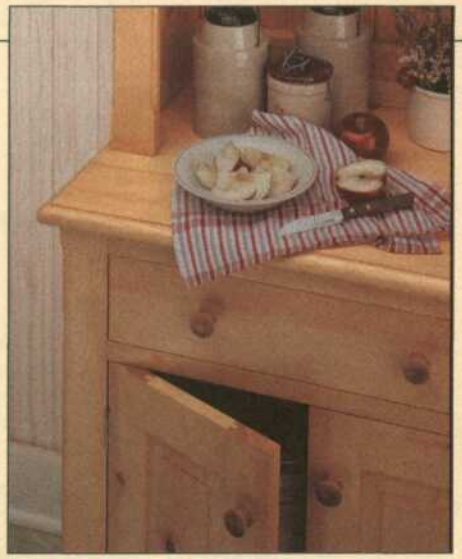

Country Hutch *page 6*

Note Board *page 18*

Finishing Cabinet *page 24*

FROM FELLOW WOODWORKERS

Tips & Techniques

GLUING MITERS

• Getting picture frames mitered to exactly 90° is hard enough. But then when you glue and clamp the corners together they always slide apart.

But I've found a simple solution. On the back side of the frame, I'll use one or two staples to hold each corner together *before* I glue them, see Fig. 1.

The staples let the corners open from the front side so the glue can get in, see Fig. 2. And they keep the corners aligned as the clamps are tightened, see Fig. 3. After the glue dries, the staples are easily removed.

Oh, by the way. Instead of using nails or those triangle-shaped push points to hold everything in the frame, try hot melt glue — it works great

George Merritt
Nepean, Ontario

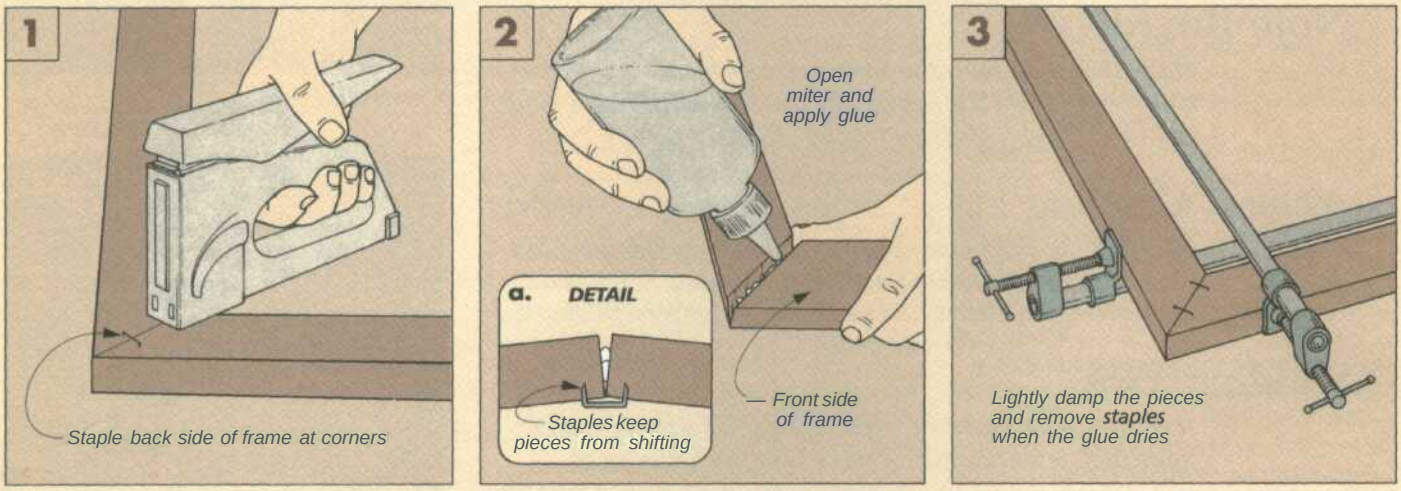

ELIMINATING SNIPE

• No matter how well I adjust my thickness planer, whenever I use it, the planer always cuts a deeper slice (snipe) at both ends of the board.

To eliminate the waste, I add "sacrificial" boards to my workpiece, see drawing. They're about 6" longer than my stock, so they get all of the snipe.

I use small dabs of hot melt glue to attach the scrap pieces to the sides. Then I feed the boards through the planer.

Once the workpiece is planed to size, the scrap pieces are easily removed. And any glue residue can be quickly scraped off.

Chuck Enfield
Brooklyn Park, Minnesota

SPACING HOLES

• When installing shelves, it takes time to measure and drill the holes for the shelf supports. And it doesn't take much to get off just a hair. So I use a simple jig to keep the holes aligned without all the measuring.

The jig is a piece of wood with four holes drilled in it. In two of the holes, dowels are installed as indexing pins, see drawing.

To use the jig, first drill two holes in the board. Then position the dowels in these holes, and use the jig when drilling the next two holes. By leap-frogging the jig down the board all the holes are drilled evenly spaced.

Jeff Scroggins
Oaklahoma City, Oklahoma

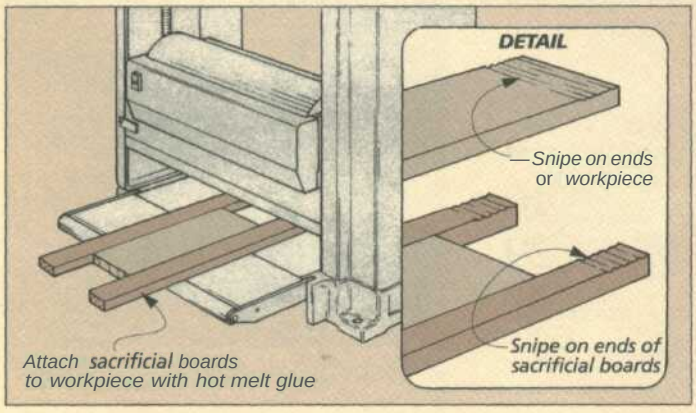

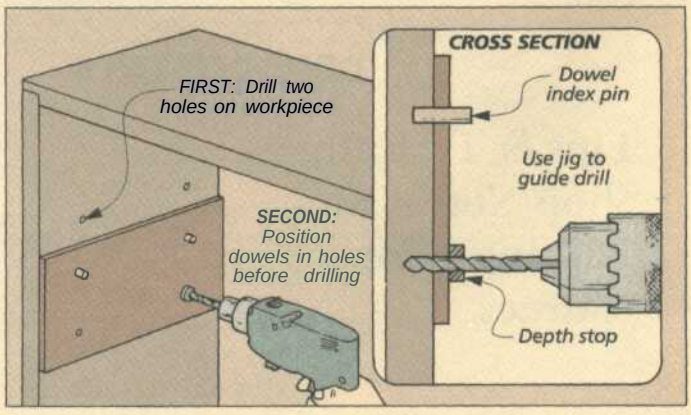

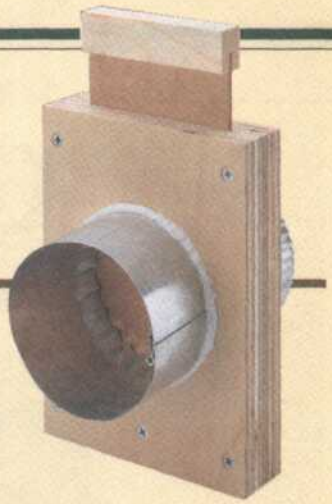

BLAST GATE

• I recently purchased a dust collector for my shop. Adding blast gates would make the collector easier to use. But it's too expensive for me to buy a blast gate for each machine.

So I decided to make my own blast gates using plywood and metal duct pipes, see photo. (PVC tubing would also work.) I started with two pieces of ¾"-thick plywood and cut out a hole the same size as the outside diameter of the pipe, see drawing.

Next, ⅛"-thick Masonite spacers fit between the plywood. This creates a gap for a sliding gate to fit into. Then glue and screw the plywood and spacers together.

I made the sliding gate from another piece of ⅛"-thick Masonite. A block glued on top forms a handle, and a screw in the bottom of the gate keeps it from being pulled all the way out when the gate is opened.

Then cut and install two pieces of metal duct pipe in the plywood. Install the pipe so it's flush with the inside edge. You don't want the pipe to bind against the sliding gate. Note: for an airtight seal use caulk around the outside of the pipe.

Steven Magdeburger
Bel Air, Maryland

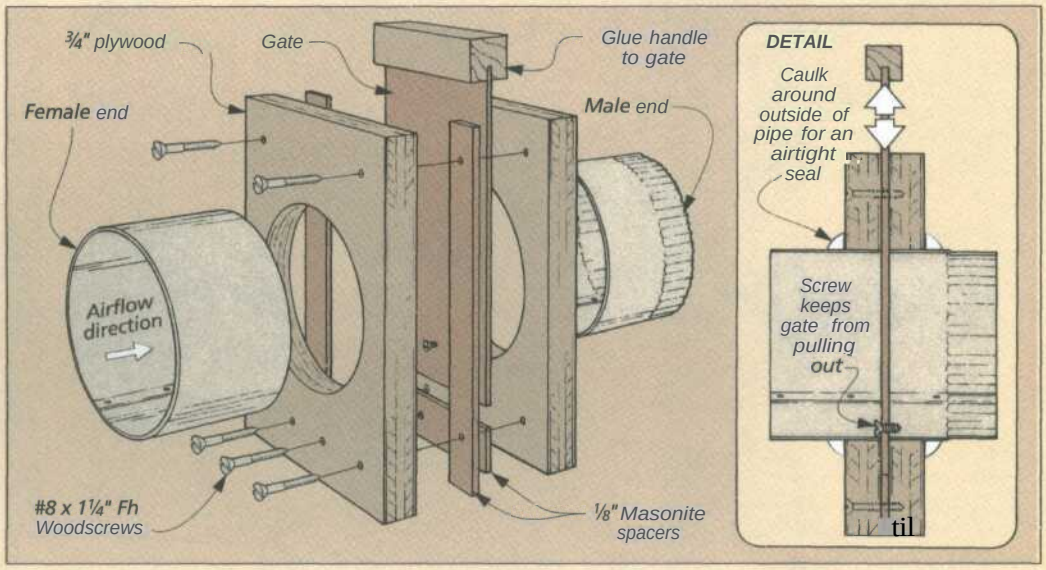

ANGLE GAUGE

• I do a lot of scroll saw work that requires changing the angle of the table. But the stamped aluminum scale under the table isn't very accurate, and it's hard to read. So I made an angle gauge that uses an inexpensive plastic protractor.

The angle gauge is simply a block of wood with the protractor screwed to the side, see Fig. 1. A piece of wire suspended from the centerpoint indicates the degree of angle, see Fig. 2.

To use the angle gauge, first adjust the protractor so the wire indicates 90° before changing the angle of the table.

Jim Penkala
Calistoga, California

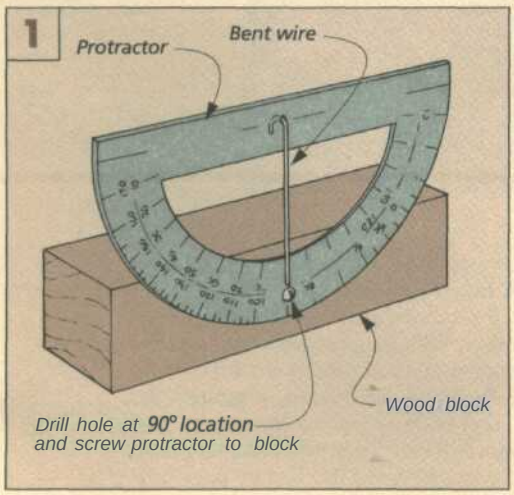

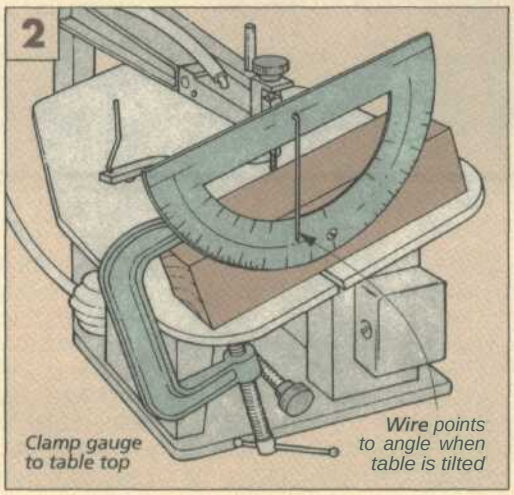

SUBMIT YOUR TIPS

If you would like to share an *original* shop-tested tip, send it to *Woodsmith*, Tips and Techniques, 2200 Grand Avenue, Des Moines, Iowa 50312. Or if ifs easier for you, FAX it to us at 515–282–6741.

If we publish it, we will send you $30 to $150, depending on the published length. Include a brief explanation and sketch (or photo). And don't worry, we'll rewrite the tip and redraw the art if necessary. Also, *please* include a daytime phone number.

Country Hutch

Knotty pine boards give this Hutch an authentic "country" look, Simple design and joinery make it easy to build.

Around here, change is a daily routine. Originally, I planned to build this Hutch from clear pine. That plan changed at the lumberyard when I learned clear pine (C-select & better) now costs more than T-bone steak. So I made a change and went with No. 2 common ("1-by" and "2-by") pine. Same wood, more knots, but a *big* difference in price.

KNOTS IN PINE. Knotty pine makes a country project look more interesting, but it can also make building the project more interesting. Too many knots and the Hutch would look like it was made from used pallets. For the best effect, the knots should be randomly spaced throughout the project With inexpensive wood, you can spend time matching boards and cutting around knots.

STAINING PINE. To finish the Hutch, I wanted the look of aged pine. So I used a honey-colored stain. But to avoid the blotches that can occur when staining pine, I also used a stain controller, see the box on page 15.

EXPLODED VIEW

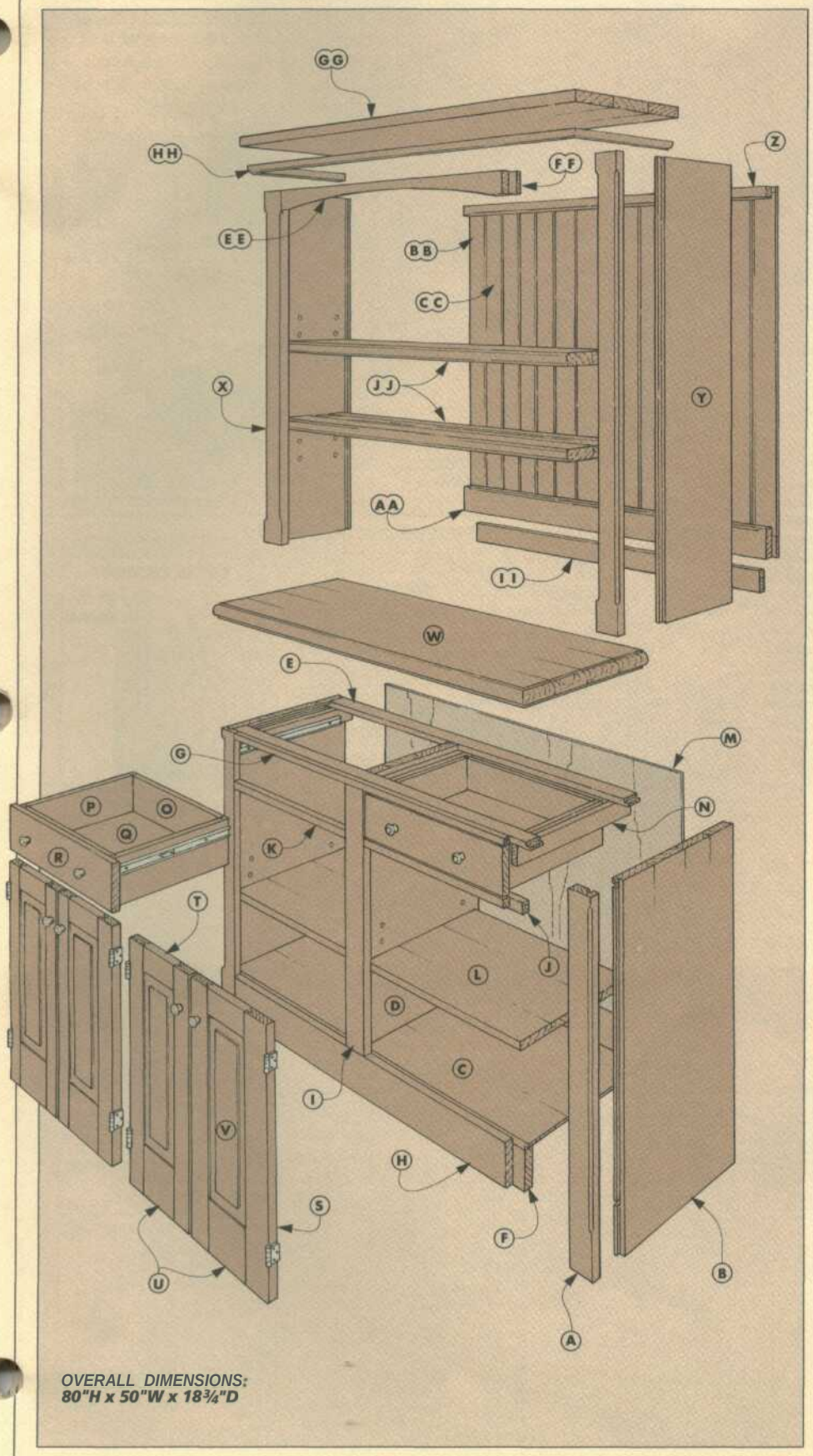

OVERALL DIMENSIONS:
80"H x 50"W x 18¾"D

MATERIALS

LOWER CABINET

A	Vertical Facings (2)	¾ x 2½ - 32¾
B	Sides (2)	¾ x 17⅝ - 32¾
C	Bottom Shelf (1)	¾ x 17 - 47¼
D	Center Divider (1)	¾ x 17 - 27¾
E	Stretchers (2)	¾ x 2 - 47¼
F	Lower Backer (1)	¾ x 4¼ - 46½
G	Upper Facing (1)	¾ x 1 - 43
H	Lower Facing (1)	¾ x 41/2 - 43
I	Divider Facing (1)	¾ x 2½ - 27¼
J	Middle Backers (2)	3/4 x 1½ - 22⅞
K	Middle Facings (2)	¾ x 1 - 20¼
L	Shelves (2)	3/4 x 1 6⅞ - 22¾
M	Cabinet Back (1)	¼ x 47½ - 28½
N	Drawer Mntg. Rails (4)	3/4 x 2 - 17

DRAWERS

O	Drawer Front/Backs (4)	½ x 4⅜ - 18¾
P	Drawer Sides (4)	½ x 4⅜ - 16
Q	Drawer Bottoms (2)	¼ x 18¾ - 15½
R	False Drawer Fronts (2)	¾ x 4⅜ - 20⅛

DOORS & TOP

S	Door Stiles (8)	¾ x 2½ - 21⅝
T	Door Rails, Top (4)	¾ x 2½ - 5¾
U	Door Rails, Bott. (4)	¾ x 4½ - 53/4
V	Door Panels (4)	½ x 5⅝ - 15¼
W	Top (1)	1¼ x 18¾ - 49½

UPPER CABINET

X	Vertical Facings (2)	¾ x 2½ - 44¾
Y	Sides (2)	¾ x 11⅝ - 44¾
Z	Upper Back Rail (1)	1½ x 1½ - 47¼
AA	Lower Back Rail (1)	1½ x 3½ - 47¼
BB	Outside Back Slats (2)	¾ x 3⅞ - 41 3/16
CC	Inside Back Slats (11)	¾ x 3½ - 41 3/16
DD	Splines (12)	¾ x ¼ - 41 3/16
EE	Valance (1)	¾ x 3½ - 43
FF	Screw Blocks (2)	V? x 3 - 3½
GG	Top (1)	1¼ x 13 - 50
HH	Cove Molding (1)	¾ x ⅝ - 84 (rgh)
II	Connecting Cleat (1)	½ x 2½ - 44
JJ	Shelves (2)	1¼ x 10⅜ - 46⅜

SUPPLIES

HARDWARE

- (8) 1¼" Birch Knobs
- (4 pr) 2" x 1⅜" Butt Hinges
- (4) Magnetic Door Catches
- (16) ¼" Spoon-Style Shelf Supports
- (2) Figure-8 Fasteners
- (2 pr) 16" Full-Extension Drawer Glides

SCREWS

- (26) #8 x 2" Fh Woodscrews
- (16) #8 x 2½" Fh Woodscrews
- (8) #8 x 1½" Fh Woodscrews
- (44) #8 x 1¼" Fh Woodscrews
- (20) #8 x 1" Fh Woodscrews
- (38) #6 x ¾" Fh Woodscrews

LOWER CABINET

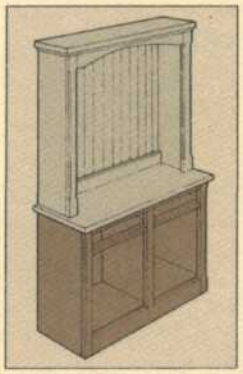

I started the Hutch by building the lower cabinet. This starts out as a case with sides, a bottom shelf, and a divider.

Note: Most of this project is built from solid pine panels. So I started by gluing up enough boards for all the panels for the lower cabinet, see Figs. 1 and 2.

VERTICAL FACING STRIPS. While the glue is drying on the panels, a pair of vertical facing strips (A) can be cut to finished dimensions, see Fig. 1.

The facing strips are attached to the front edge of the side pieces. But rather than attaching them with a simple butt joint, I decided to use a tongue and groove joint, see Fig. 1. This helps keep the mating pieces in alignment during assembly.

SIDE PANELS. Before attaching the facings, I cut the side panels (B) to finished size, see Fig. 1. Then, for holding the bottom shelf and top stretchers that are added later, there's a pair of dadoes across the inside face of each panel, see Figs. 1 and 1b.

And a rabbet along the back inside edge is for accepting a plywood back, see Fig. 1b.

Note: For a tip on attaching the facing to the side, refer to page 16.

SHELF & DIVIDER. Now the other two major panels, the bottom shelf (C) and center divider (D), can be cut to finished dimensions, see Fig. 2.

STRETCHERS. The shelf connects the hutch sides at the bottom. But at the top, I used a pair of stretchers, see Fig. 2. So next I cut these stretchers (E) to finished size.

TONGUES & NOTCHES. Before the lower cabinet can be assembled, tongues must be cut on the ends of both the shelf and the stretchers, see Fig. 2b. The tongues are cut to fit the dadoes in the side panels.

Next, cut a small notch on the top corners of the center divider (D). These permit the divider to fit between the stretchers when everything is assembled.

ASSEMBLE UNIT. Now the lower cabinet can be assembled. I started by gluing the shelf and stretchers between the sides.

Next, install the divider with woodscrews down through the stretchers, see Figs. 2 and 2a. Also screw into the divider through the bottom shelf, see Figs. 2 and 3. Note: Position the divider so it creates two equal-size compartments inside the cabinet.

BACKER BOARD. The last structural part of the lower cabinet is a lower backer (F) that fits across the bottom of the case under the shelf, see Figs. 3 and 3a. This stiffens the shelf and makes the cabinet more rigid.

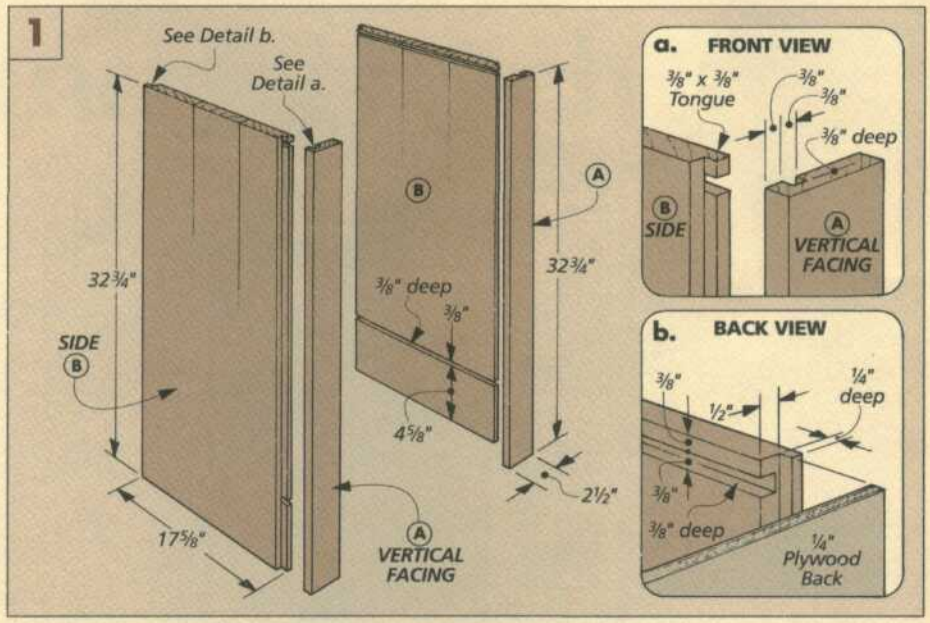

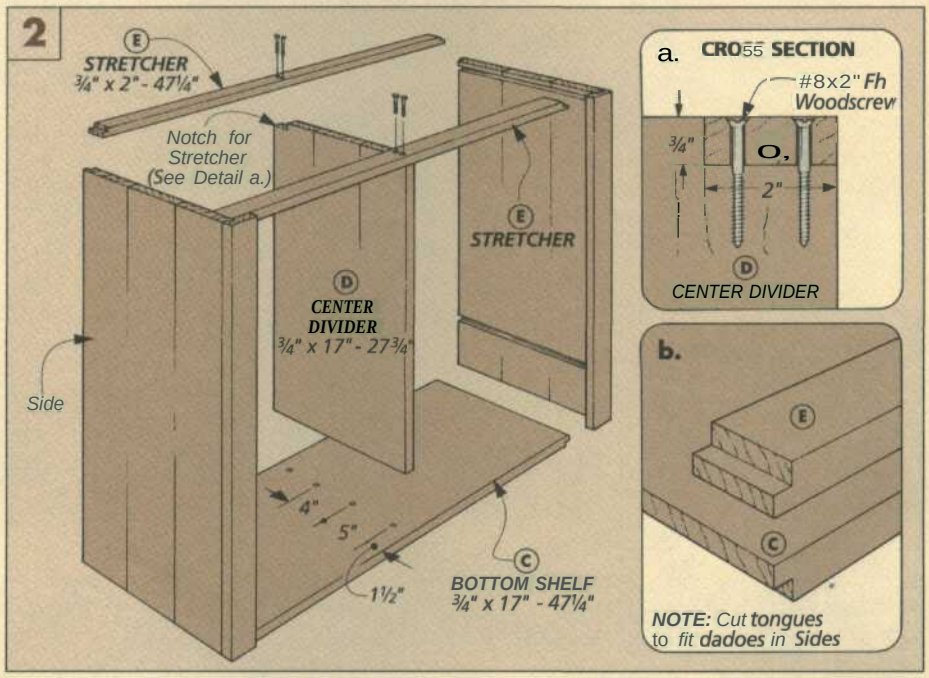

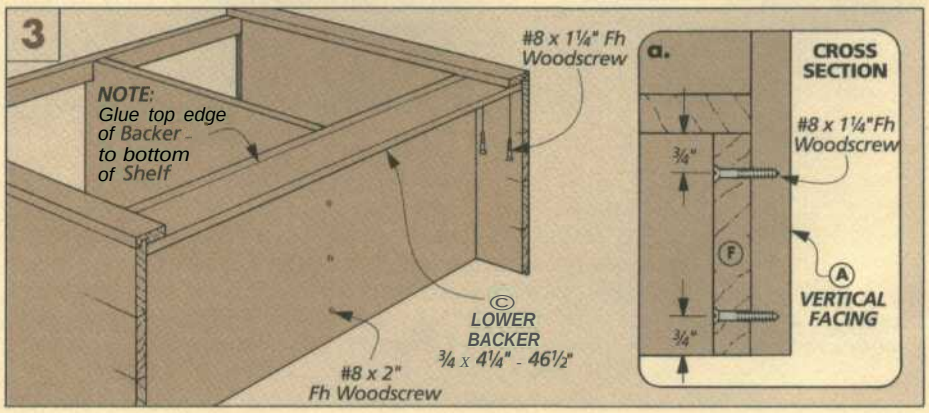

There are a couple reasons for adding facing pieces to the carcase of a cabinet. First, vertical facings give the appearance that the sides and divider are thicker. Second, the middle (horizontal) facings create the openings for the door and drawer compartments.

UPPER & LOWER FACINGS

There's nothing tricky about cutting the facing strips, but the sequence for installing them is important. I started by gluing an **upper facing (G)** onto the front stretcher, see Figs. 4 and 4a.

Next, glue the **lower facing (H)** onto the lower backer (F), see Figs. 4 and 4b.

Note the "lip" that's created when the lower facing is attached, see Fig. 4b. This acts as a stop for the doors installed later.

DIVIDER FACING. After the horizontal facings are in place, the **divider facing (I)** can be cut and glued to the edge of the divider, see Fig. 4. Then, for added strength, the top of the divider facing is secured with a pair of woodscrews, see Figs. 4 and 4a.

DRAWER BACKERS & FACINGS. By now, the base has two large, open compartments. The next step is to divide this space into drawer and shelf compartments.

To do this, I added another set of facings. But to hold the facings, I first installed a pair of **middle backers (J),** see Fig. 5.

Then the **middle facings (K)** are glued to the backers, see Figs. 5 and 5a. Note: The facings create another lip that serves as an upper stop for the doors, see Fig. 5a.

DECORATIVE COVES. After the door and drawer compartments have been separated, I used a ¼" cove bit to rout a decorative cove on the outside edge of each facing strip (A), see Fig. 4. Note: It helps to lay the cabinet on its back to rout the coves.

SHELVES & BACK

At this point, all the structural parts of the base are complete. So, before moving on to the top shelf and upper unit, I built the inside shelves and enclosed the back.

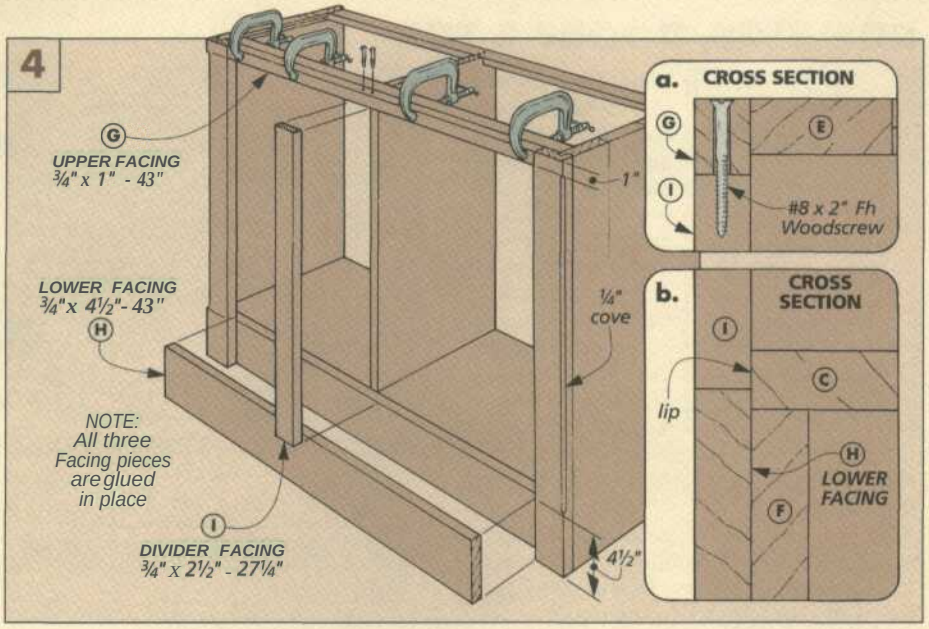

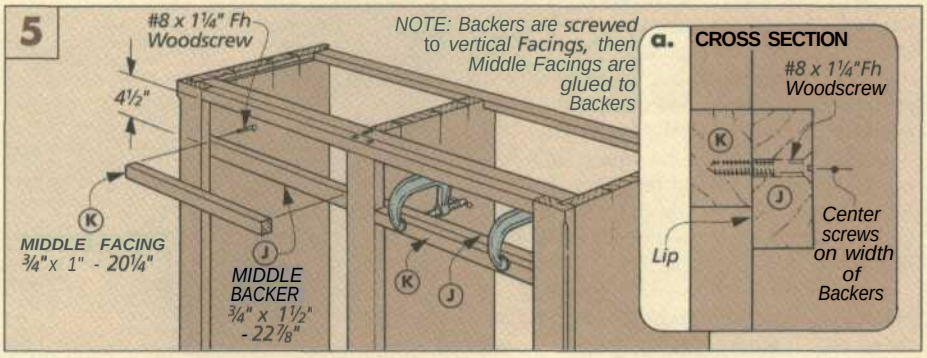

ADJUSTABLE SHELVES. I built two shelves to fit inside the lower unit — one on each side of the vertical divider. And, like the other panels in this project, the **adjustable shelves (L)** are glued up from several strips of pine, see Fig. 6. For ease of installation, the shelves are cut ⅛" *shorter* than the width of the compartments, see Figs. 6, 6a.

To support the shelves — and also make them adjustable — I drilled three sets of holes for each shelf, see Fig. 6. (See page 31 for sources of hardware for the Hutch.)

PLYWOOD **BACK.** After the shelves were complete and the support holes drilled, I enclosed the back of the unit with a piece of ¼"-thick plywood, see Fig. 7. The **cabinet back (M)** fits in the rabbets on the back edge of the side panels. But it doesn't extend to the bottom of the case, just to the bottom of the lower shelf (C).

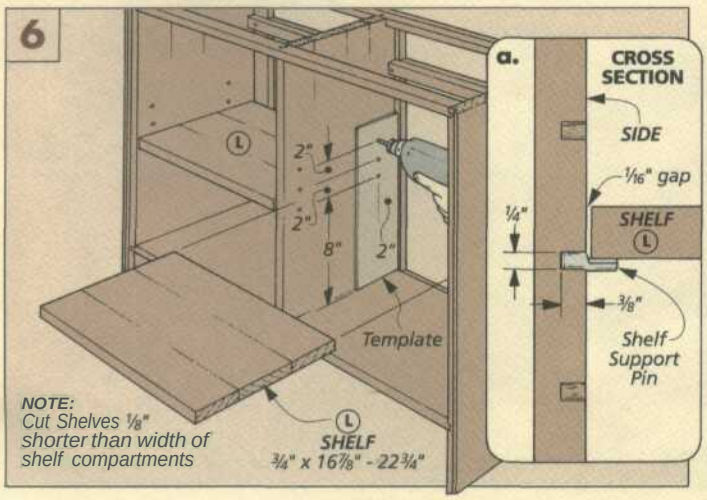

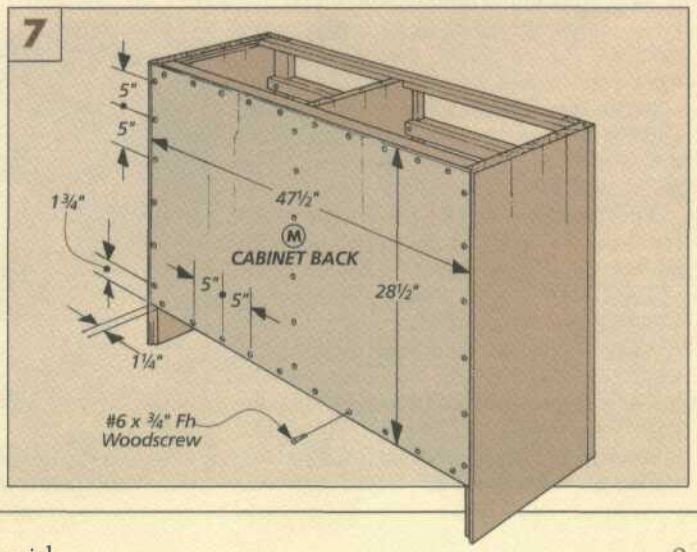

DRAWERS, DOORS & TOP

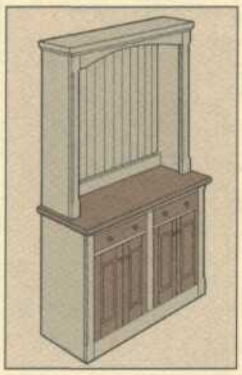

With the shelves and back installed, I moved on to the drawers. But first there needs to be some way of attaching the drawer hardware (glides).

MOUNTING RAILS. Ordinarily, drawer glides are attached directly to the sides of a cabinet. But on this project that's not possible — the sides are "recessed" because of the vertical facings on the front of the cabinet sides.

So I came up with a different method of attaching the drawer glides. Ifs a system of mounting rails — strips of wood suspended below the stretchers (E), see Fig. 8.

After cutting the mounting rails (N) to finished dimensions, they can be installed inside the case, see Fig. 8a.

Note: In order for the drawers to fit properly, the rails are installed flush to the inside edges of the facings on the front of the case.

DRAWERS. After the mounting rails have been installed, I moved on to the drawers. All the drawer parts, the front/backs (O) and the sides (P), are cut from ½"-thick stock, see Fig. 9.

Note: There are three dimensions to consider when cutting the drawer parts. First, the drawer glides I used require ½" clearance on each side of the drawer, see Fig. 9a.

The details of the drawer joint are the second dimension that affect the *length* of the fronts and backs (O), see Fig. 9b.

And third, all the drawer parts are cut to *width* to allow a 1/16" gap at the top and bottom, see Fig. 9a.

DRAWER JOINTS. After the drawer parts had been cut to finished dimensions, I cut the tongue and dado joints that hold the parts together, see Fig. 9b.

Next, to hold the drawer bottoms, I cut a groove along the inside face of each drawer part, see Fig. 9c. Then, the bottoms (Q) can be cut to fit in the grooves.

FALSE FRONTS. The full-extension drawer glides I used on this project need to be hidden when the drawers are closed, see Fig. 9a. That's the job of false fronts, see Fig. 10.

The false fronts (R) are cut from ¾"-thick stock to fit the drawer openings with an even (1/16") gap all around, see Fig. 10a.

Then two holes can be drilled for a pair of wood knobs, see Fig. lOa.

DRAWER GLIDES. Before the drawers can be installed in the case, the drawer glides need to be attached. (Refer to page 16 for more on this.)

After the drawers are installed, the false fronts can be attached, see Figs. 10 and lOa.

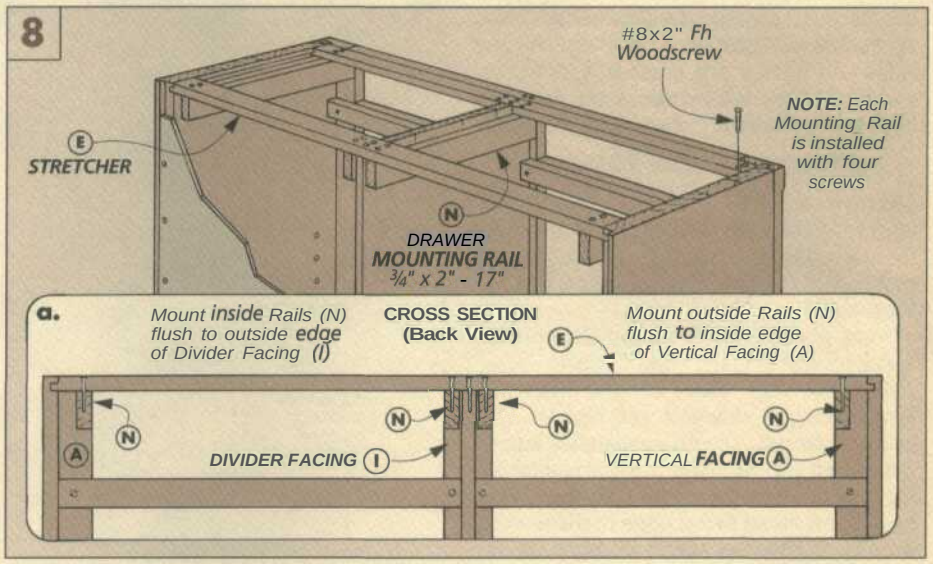

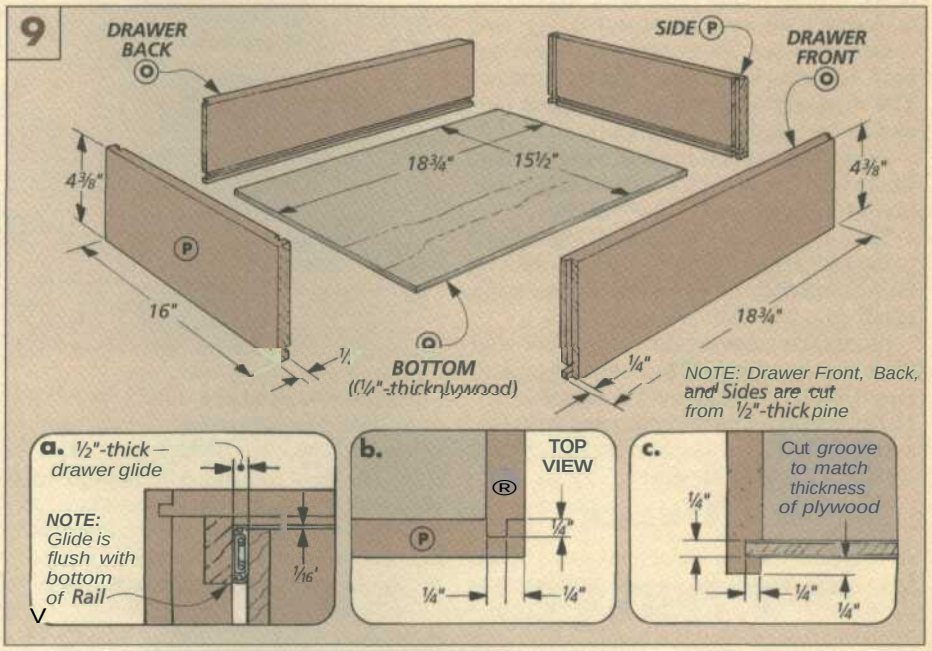

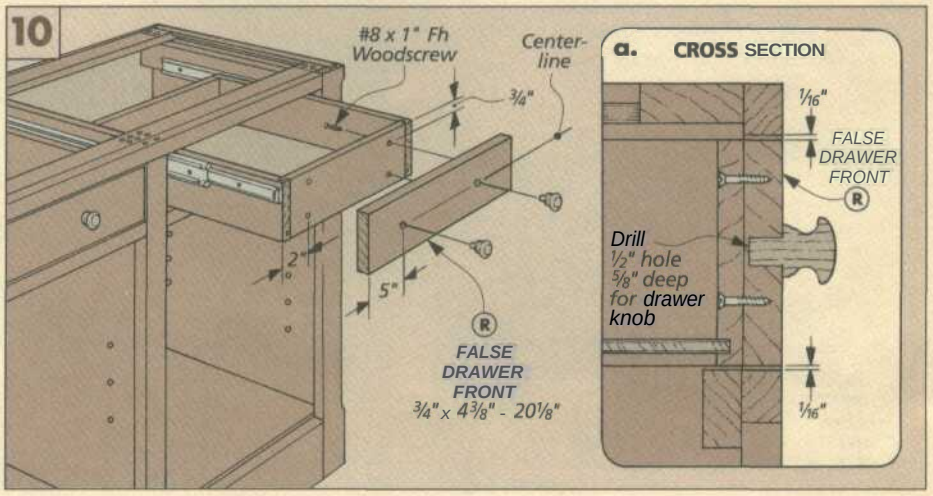

The doors that enclose the bottom of the Hutch are made in the traditional way – solid wood panels inside solid wood frames.

RAILS & STILES. I started the doors by cutting the frame pieces. Two vertical **stiles** (S) and two horizontal **rails (T** and **U)** for each door, see Fig. 11.

Note: The bottom rails (U) are wider than the top rails (T).

After the frame parts have been cut, grooves for the panel can be cut on the inside edges, see Fig. 11a.

Then, stub tenons are cut on the ends of the rails to fit in the grooves, see Fig. lla.

RAISED PANELS. The **panels** (V) inside the frames are made from ½"-thick pine. And to allow for expansion and contraction inside the frames, the panels should be cut ⅛" *smaller* in both directions than the distance between the bottoms of the grooves, see Fig. 11.

After the panels have been cut to size, I used the table saw to cut a bevel all around the front face. This creates a decorative raised field, see Fig. 11b. (For more on this, refer to page 16.)

Now, all the doors can be assembled with glue in the corner joints *only*, not around the panel. It must be free to "float" when it expands and contracts.

HINGES & KNOBS. Before the doors can be installed, mortises are cut for the hinges, see Figs. 11 and 11c.

Shop Note: I cut the mortises in the door stile ⅛" deep — enough to create a 1⁄16" gap between the door and the case when the door is installed. This way, mortises don't need to be cut in the case.

After installing the hinges on each door, I drilled a ⅝"-deep hole on the front for the door knob, see Fig. 11. (They're the same knobs used on the drawers, refer to Fig. 10a.) Then the knobs can be glued in the holes.

Finally, the doors can be installed inside the case and adjusted for an equal 1⁄16" gap around and between them.

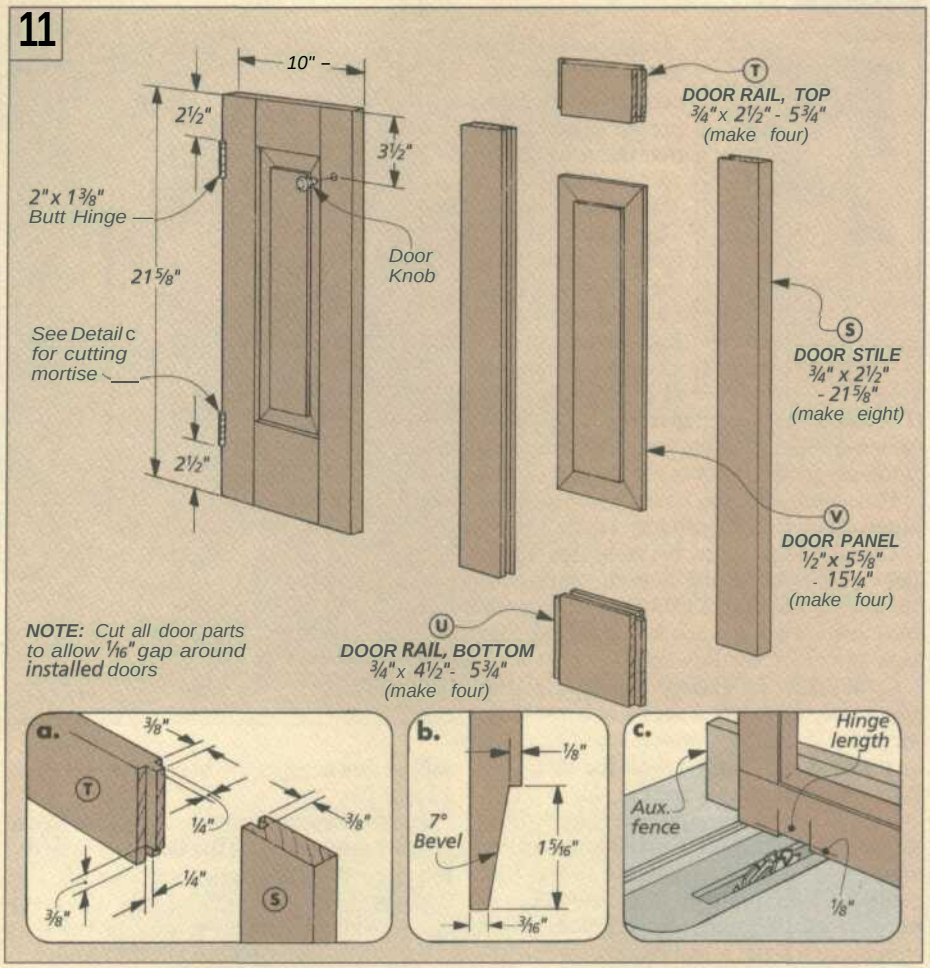

DOOR CATCHES. Next, to secure the doors in the closed position, a magnetic catch is installed inside the case, see Fig. 12a. And a strike plate is attached to the inside face of the door stiles, see Fig. 12a.

TOP. I completed the lower cabinet by making a top for the unit, see Fig. 13.

The top **(W)** is glued up from 1¼"-thick stock. After the top had been cut to finished size, I routed a decorative bullnose profile around the sides and front (but not along the back), see Fig. 13a.

Finally, I attached the top to the case using woodscrews through oversize (3⁄16") shank holes in the stretchers, see Fig. 13.

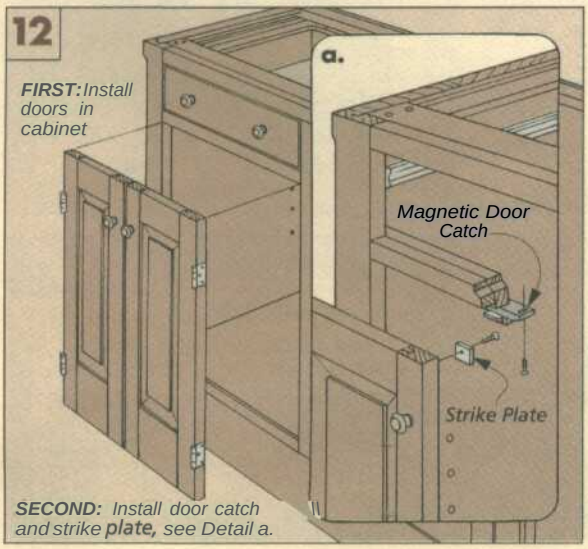

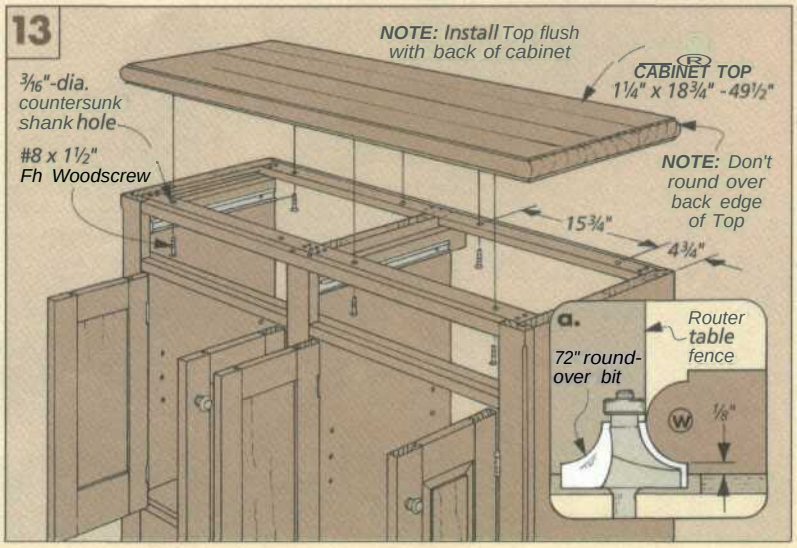

UPPER CABINET

At this point, the lower cabinet is complete. By adding an upper cabinet, the project becomes a hutch.

FACINGS & SIDES. The upper cabinet is built much like the lower one. First, **vertical facings (X)** are cut and glued to the **sides (Y),** see Fig. 14. (The same tongue and groove joint used on the lower unit is used to connect the facings to the sides, see Fig. 14a.)

Then a stopped cove is routed on the front edges of the facings, see Fig. 14.

The main difference between this upper unit and the lower unit is in the joinery at the back. Instead of a rabbet, the sides for this unit have a groove for accepting the back assembly, see Fig. 14b.

BACK RAILS. To enclose the back of the upper unit, there are a series of back slats, see Figs. 15 and 18. These are held in place by a pair of rails that connect the sides (Y) at the top and bottom, see Fig. 15.

Note: The rails are cut from 1½"-thick stock, but the **upper rail (Z)** is *narrower* than the **lower rail (AA),** refer to Fig. 19a.

After cutting the rails to finished dimensions, I cut the joints on each piece. This consists of a short offset tenon that fits into the groove in the sides, see Figs. 16 and 16a.

The other joinery on the rails is a simple rabbet that accepts the back slats, see Figs. 17 and 19a.

COVES. Finally, I routed a ¼" stopped cove on the bottom edge of the upper rail and the top edge of the lower rail, see Figs. 15, 19a.

BACK SLATS. The back of this unit is enclosed with thirteen back slats. All the slats are cut to the same length (41 3/16") from ¾"-thick pine, see Fig. 15. The only thing that's a bit unusual here is the width of the slats.

The two **outside slats (BB)** are wider (3⅞") than the eleven **inside slats** (CC, 3½"). That's because the tongues on the outside slats are hidden. (The idea is for all the slats to look the same after they're installed.)

After cutting the slats to finished dimensions, a groove is cut on *both* edges of the inside slats (CC). This is for a spline that keeps the slats aligned, see Figs. 18 and 18a.

Then, an identical groove is cut on just the

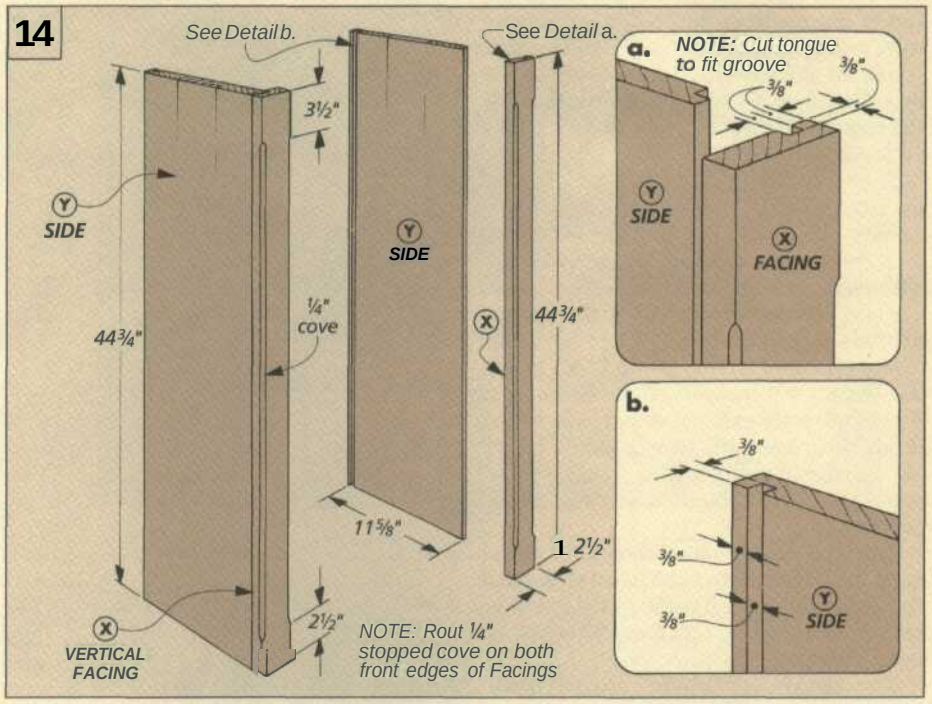

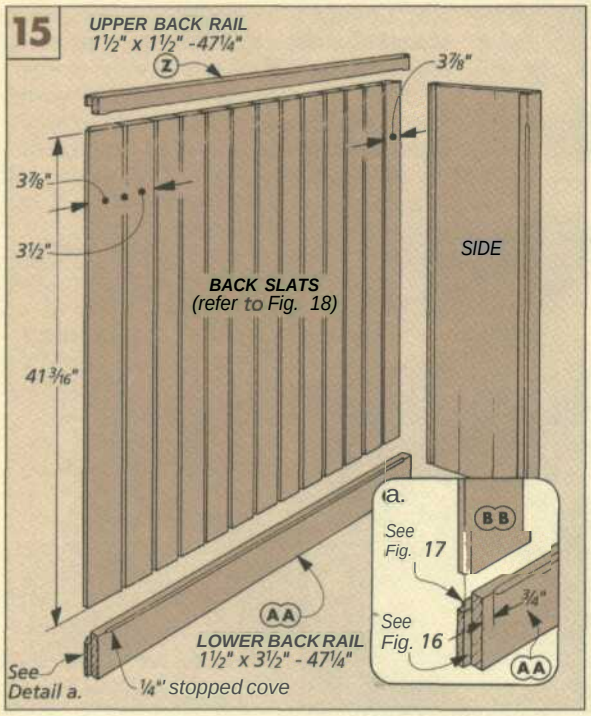

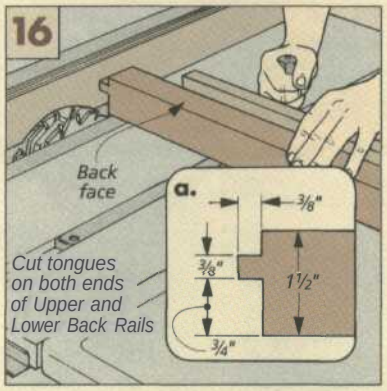

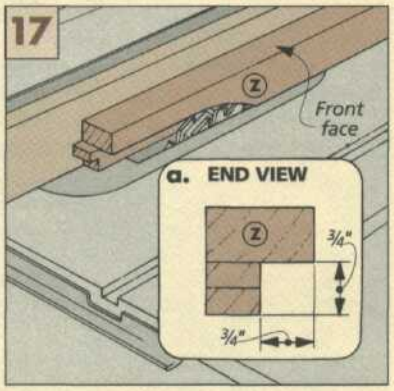

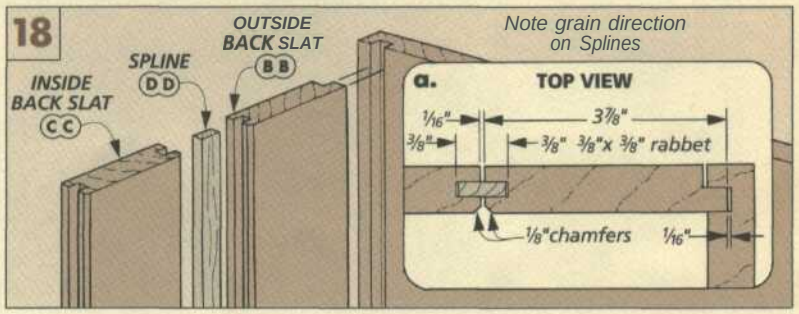

inside edge of the outside slats (BB). Finally, a rabbet is cut on the outside edge of the outside slats, see Figs. 18 and 18a.

CHAMFERS. Then, before the slats can be installed, I routed a decorative chamfer on both edges of the inside slats, but only one edge of the outside slats, see Fig. 18a.

SPLINES. Now that the slats are cut, there needs to be a way to keep them all aligned. That's the job of splines, see Fig. 18.

The splines **(DD)** are pieces of ¾"-thick pine ripped to width (¼") so they fit in the grooves in each of the slats, see Fig. 18a.

ASSEMBLY. Now the upper unit can be assembled. To do this, I found it easiest to first attach the slats between the top and bottom rails. Don't forget to install a spline (with no glue) between each of the slats.

I started by screwing the outside slats to the rails so the edge of each outside slat aligns with the end of the tenon on the rails.

Then attach the inside slats so there's a consistent-size (1/16") gap between the slats.

With the back slats and rails assembled as a unit, the sides of the cabinet can be glued on, see Fig. 19.

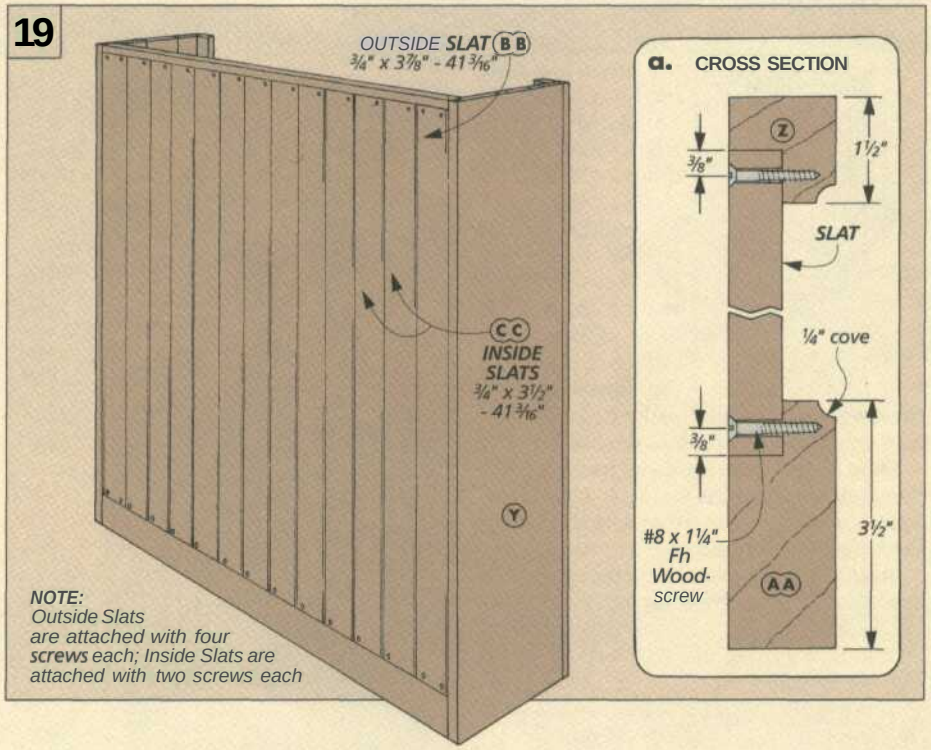

VALANCE & TOP

Now the side can be connected across the front by a strip called a valance.

VALANCE. The valance (EE) starts out as a long strip cut to fit between the vertical facings, see Fig. 20. Note: When measuring for the valance, the back unit must be square.

To lay out the arch shape, first make pencil marks to indicate the ends of the arc, see Fig. 21. Then make a mark to indicate the top of the arc. Now, connect the marks using a thin stick as a guide for the pencil. (Nails hold the stick while the curve is drawn.)

Next, the arched profile can be cut on the band saw or sabre saw. Then sand the arch smooth and rout a decorative cove along the bottom edge, see Fig. 21a.

SCREW BLOCKS. There's a simple way to attach the valance between the vertical facings. It involves a pair of ½"-thick screw blocks **(FF)** that are glued and screwed to the back of the facings. Then the valance is screwed to the blocks, see Figs. 20 and 20a.

TOP. The **top (GG)** of the upper unit is just like the top of the lower unit It's glued up from 1½"-thick stock then cut to size, see Fig. 22. Note: The edges of this top are left square (no bullnose profile).

The top can now be screwed to the sides (Y), back rail, and valance, see Figs. 22 and 22a. Note: There should be an equal (1") overhang on the sides and front but no overhang at the back.

MOLDING. The edges of the top aren't routed, but there *is* a decorative detail. It's a strip of molding (HH) attached below the top with 4d finish nails, see Figs. 22 and 22a.

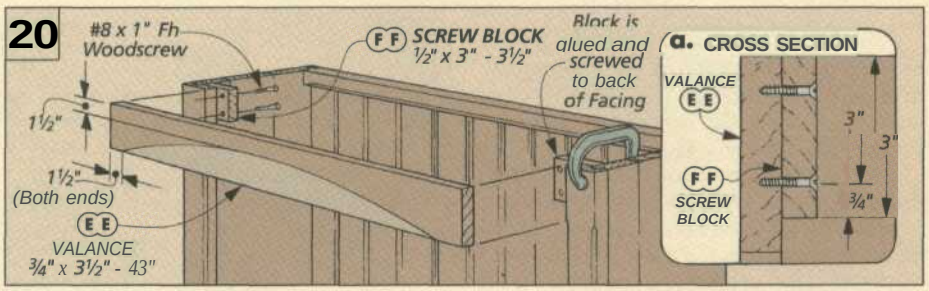

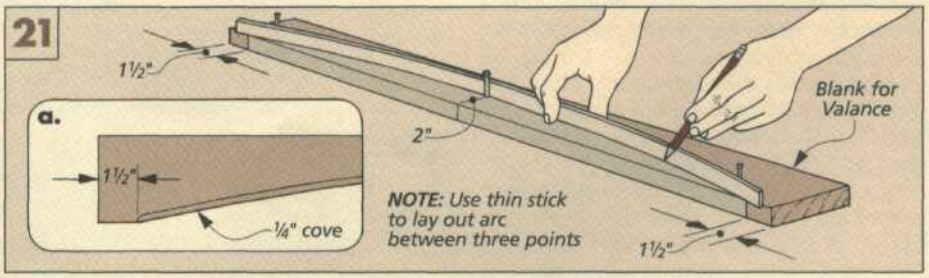

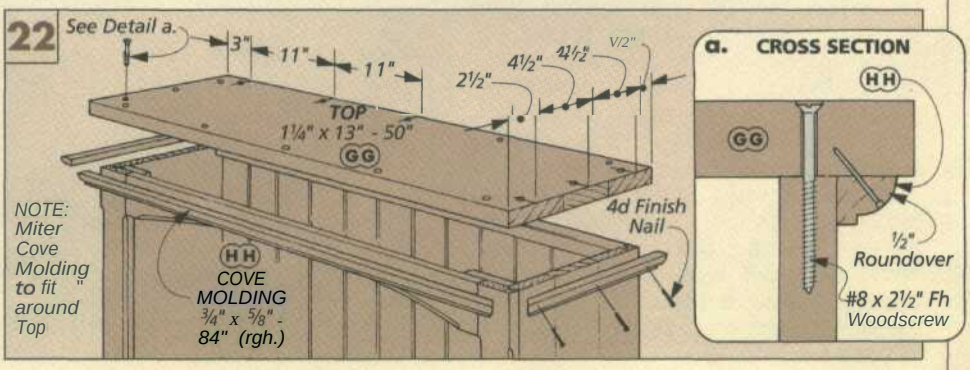

TOP SHELVES

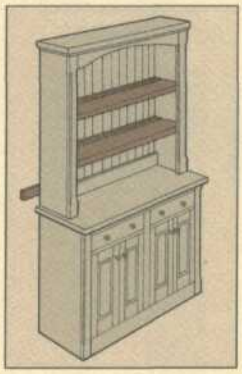

The upper half of the Hutch is almost ready to be placed on the lower half. But there's one thing to do first

SHELF HOLES. I planned to add two shelves to the upper unit. And I wanted each shelf to be adjustable. So before attaching the upper unit to the lower case, I drilled twelve holes in each side for shelf support pins, see Fig. 23.

Shop Note: I used the same trick used for the shelf support pins on the lower unit — a piece of Masonite as a template for drilling the holes, see Fig. 23.

FIGURE-8 FASTENERS. Now the upper unit can be attached to the lower unit. To do this, I first installed a pair of "Figure-8" fasteners on the bottom end of each vertical facing (X), see Fig. 24.

In order for the upper unit to pull tight to the lower unit, the fasteners must be recessed into the facings. This is done by drilling a shallow hole on the bottom of each facing, see Fig. 24a.

Shop Tip: Each hole should be drilled slightly off center of the facing. To keep the drill bit from wandering, I used a piece of scrap clamped to the facing as a guide for the drill bit, see Fig. 24a.

After the fasteners have been screwed to the facings, the upper unit can be attached to the lower unit, see Figs. 25 and 25a. Then it can be secured at the back, too.

CONNECTING CLEAT. The method I used to attach the top unit to the bottom unit at the back is fairly straightforward. It's a cleat that's screwed across both units, see Fig. 26.

After cutting the **connecting cleat (II)** to finished size, I chamfered the edges, see Fig. 26a. Then the cleat can be screwed to the back of the upper and lower units.

SHELVES. The last part of this project is one of the easiest — building two **shelves (JJ)** to fit in the upper unit, see Fig. 27.

Note: Because these shelves have a longer span than the shelves in the lower unit, they're made from 1¼"-thick pine.

After the shelves have been cut to fit inside the top unit, I next used a cove bit to rout a decorative edge along the front of each shelf, see Fig. 27b. This ties the shelves in with the rest of the project.

Finally, I routed a pair of grooves along the top of each shelf to act as plate holders. For this, I switched to a core box bit in the router table, see Figs. 27 and 27a. The router table fence acts as a guide for routing the plate grooves — two different setups are all that's needed. ❑

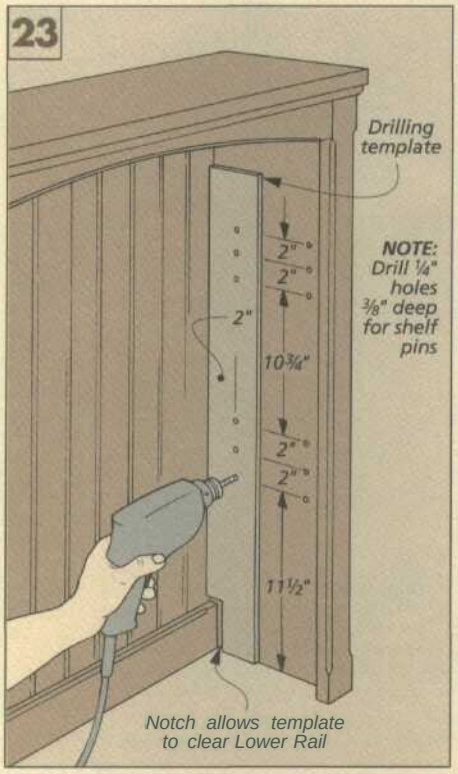

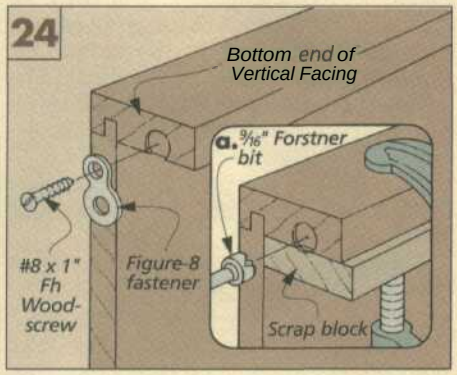

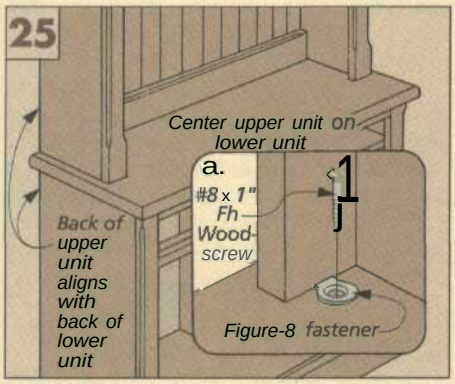

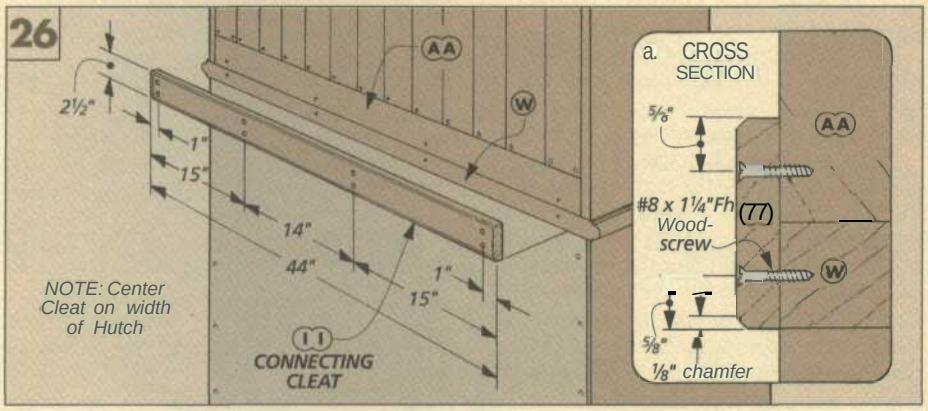

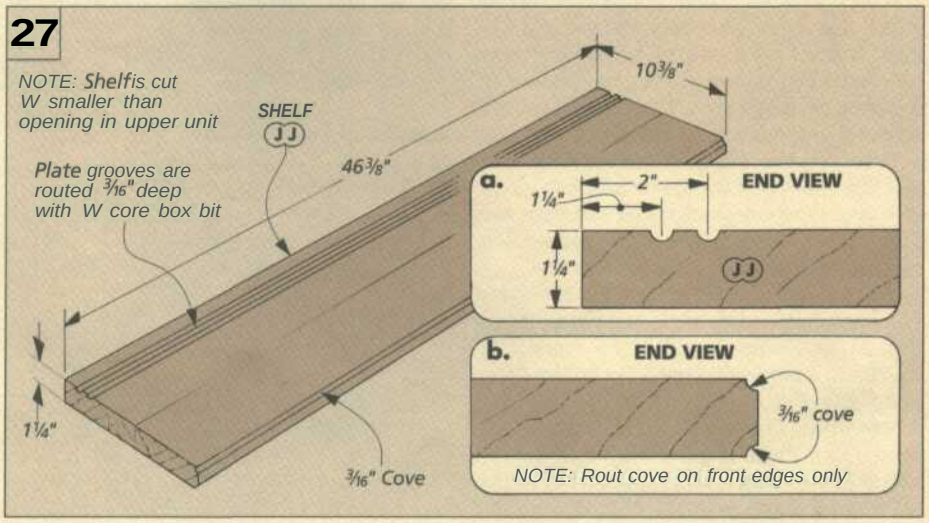

BLOTCH-FREE STAINING

Pine can be a stubborn wood to stain. The problem is that the pores of the wood alternate from large, open pores to small, dense ones. These variations affect the way a stain is absorbed into the wood. Most of the time, the result is ugly blotches.

That's why, in the past pine furniture was often finished without a stain. Or it was painted. But for the Country Hutch in this issue, I wanted the look of an aged piece of pine — without waiting for it to develop naturally. Using a honey-colored stain was the answer. But to avoid blotches, I first treated the wood with a stain controller.

STAIN CONTROLLER. The type of stain controller I used is a thinned-down oil that penetrates all the pores of the wood. So when the stain is applied, it penetrates the pores less deeply but more evenly. And more even penetration means less blotching. (Think of applying a stain controller as similar to searing a thick steak on both sides before grilling it.)

Stain controller is applied like an ordinary coat of oil finish. Wipe it on liberally, let it soak in, then wipe off the excess. The key to avoiding blotches is to begin applying the stain right away, before the stain controller has dried completely.

TOP COAT. After the stain has dried completely (in about 24 hours), you can apply the top coats of finish. (I used two coats of wiping varnish, see page 31.)

Note: After the stain has dried, you may notice that the wood has grown some "whiskers." These are small fibers that were raised by the coat of stain. The way to eliminate whiskers is to apply the first coat of varnish with 600-grit wet/dry sandpaper.

CUTTING DIAGRAM

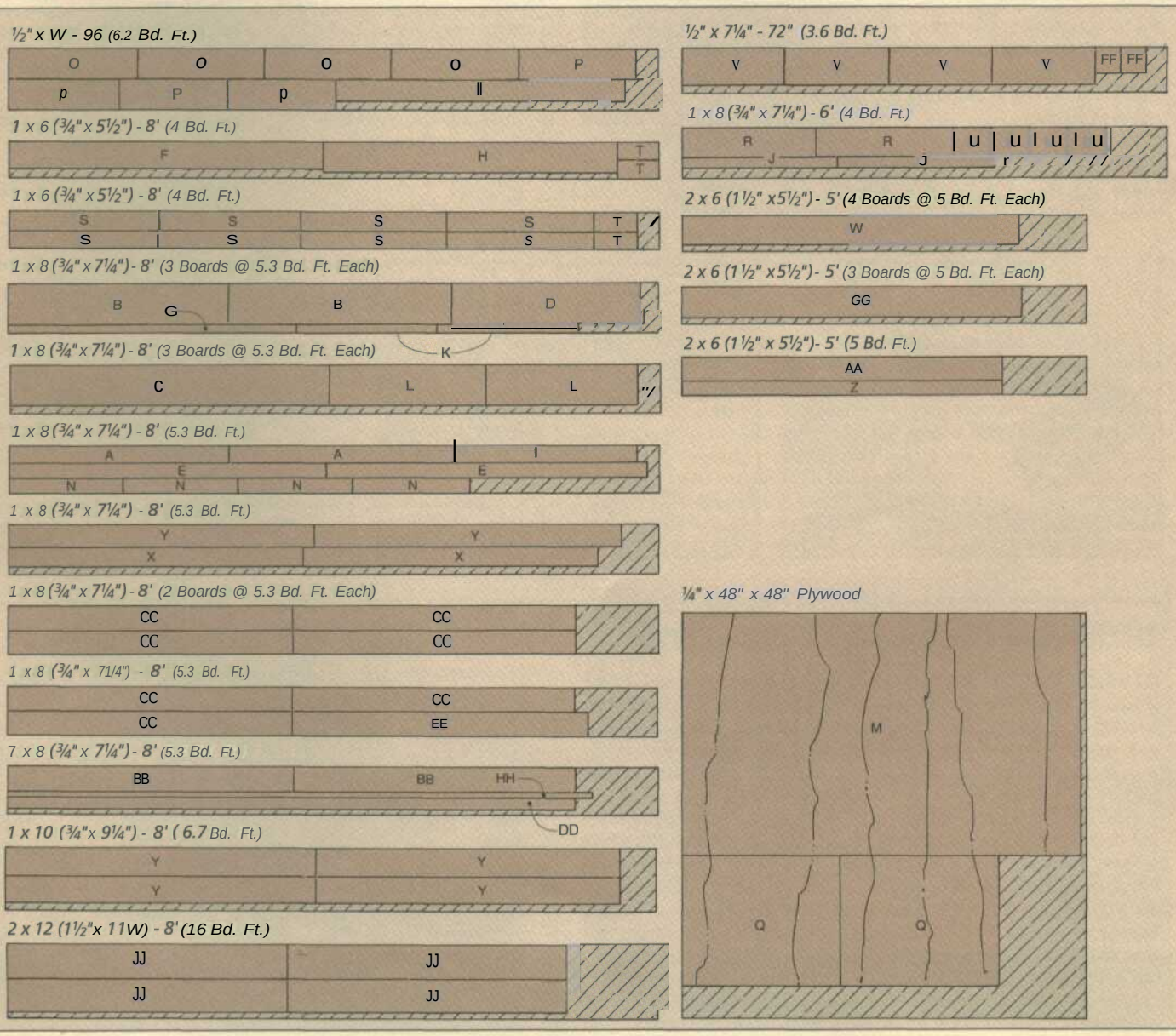

Shop Notes

SHARPENING A V-PARTING CHISEL

• Compared to a regular chisel, sharpening a carving tool is a bit more involved. Especially one like the V-parting chisel used to carve the pattern on the Note Board, see pages 18 and 20.

SHARPENING THE FACES. For a V-parting tool, you begin just like you're sharpening a regular chisel with the beveled face down. But because a V-parting tool has two sides that come together at an angle, both outside faces must be sharpened, see Fig. 1. Note: I use a medium-grit oil or water stone.

To do this, hold the chisel at about a 20°-25° angle and move it back and forth along the stone. To keep the angle consistent, use short strokes.

The trick here is to sharpen both sides evenly. I count out a few strokes on one side, then flip it over and do the same number of strokes on the other.

What you're looking for is a small burr that runs completely across the inside face on each side. To keep this burr from breaking off and forming a ragged edge, I remove it by dragging the inside face against the corner of a leather strop.

REMOVING THE HOOK. When the burr has been removed, there's still a small "hook" left on the outside corner, see Fig. 2a. If you don't remove this hook, the tool will be hard to control.

Removing the hook isn't difficult. Just gently roll the tip of the chisel back and forth across a medium stone, see Fig. 2.

But be careful. You don't want to remove too much metal. Instead of just grinding away the hook, you'll create a tiny divot, which also prevents a clean cut. (If this happens, square up the edges and start again.)

POLISHING. The last step is critical to getting the tool really sharp. It's polishing the chisel with a leather strop (or buffing wheel if you have one). Polishing removes the tiny nicks in the edge where the outside and inside faces come together. Removing these nicks makes the tool much sharper.

To do this, add a little jeweler's rouge to the leather and repeat the sharpening steps to polish the edge, see Fig. 3. Don't overdo it though. You can change the angle of the bevel if you strop it too much.

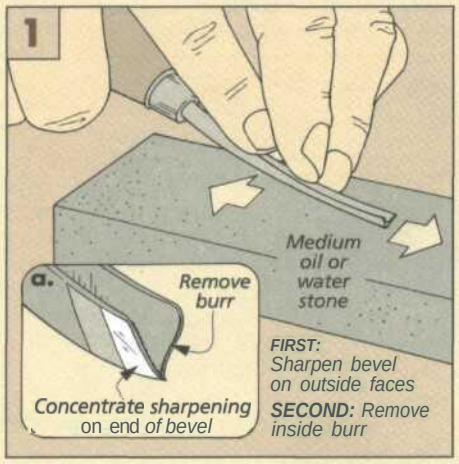

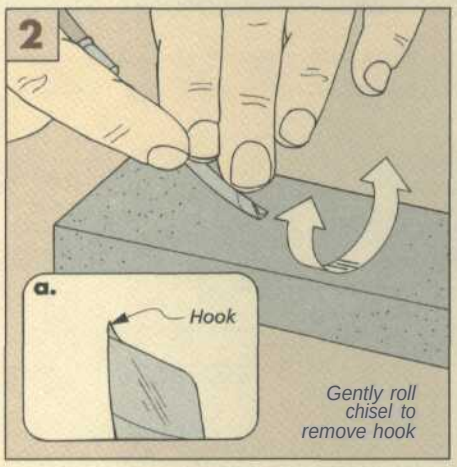

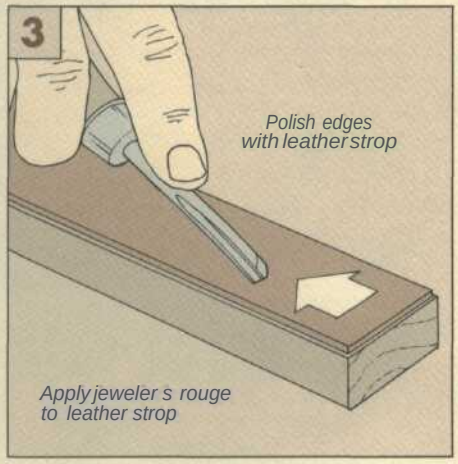

DRAWER GLIDE INSTALLATION

• I wanted to make the Country Hutch on page 6 as traditional-looking as possible. But there was one modern innovation I wasn't going to leave out: full-extension drawer glides.

Wood glides look traditional, but they also tend to bind under a heavy load, such as a drawer full of silverware. (This is especially true of pine.) Full-extension glides open smooth and also make it easy to get at the contents in the back of a drawer.

Like any drawer hardware, full-extension glides have to be mounted level with each other. But this can be a little trickier than with other glides. That's because the edges are typically rounded. So it's hard to line them up accurately.

With the Country Hutch the mounting rails for the drawers hang from the top and aren't part of the sides. So I clamped a scrap piece to the bottom of the rails to create a little ledge, see Drawing. When the glides were set in place, they were perfectly flush with the bottom of the rails and level to each other.

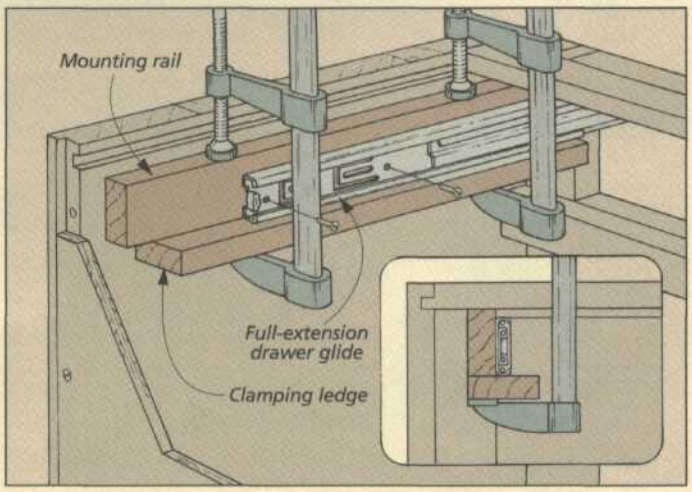

SQUARE CORNERS

• Most of the time when you add facing strips to a case, the case has already been built. Adding the facing is simply a matter of gluing and clamping the strips in place.

But I built the Country Hutch a bit different. I added the vertical facings to the sides *before* building the case. And instead of butting them, I cut tongue and groove joints to add strength and keep these pieces aligned when clamping them together.

But keeping pieces aligned isn't the same as keeping them square. You'd think that when using a tongue and groove joint, there wouldn't be any need to worry about the squareness of the assembly. If the joint is cut right, the tongue and groove should "lock" the pieces square.

But surprisingly, this isn't the case. The problem isn't with the joint — it's with the clamps. If the clamps aren't *perfectly* centered on the joint, they tend to force the facing piece out of square, see Fig. 1.

There are two solutions. One is to make sure the clamps are centered perfectly. But this is easier said than done. Especially on the Hutch's long side panels and facings.

A better way to keep the pieces square is to use clamping blocks, see Fig. 2. I clamp these square blocks into the corner of the assembly. So the assembly is automatically pulled up square against the blocks.

Note: I cut off the inside corner of each block. This way, any excess glue that's squeezed out won't make the clamping blocks a permanent part of the Hutch.

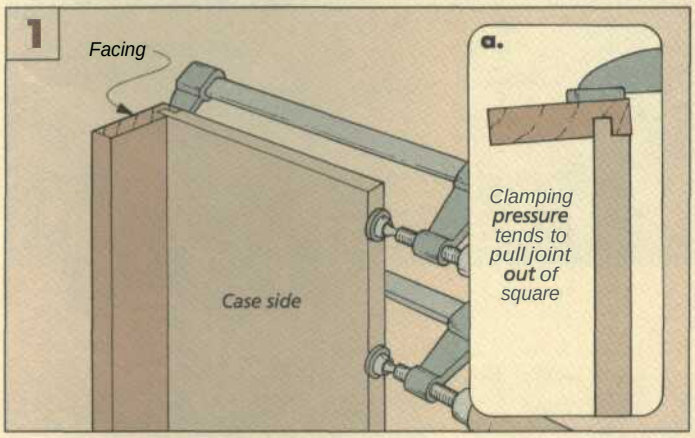

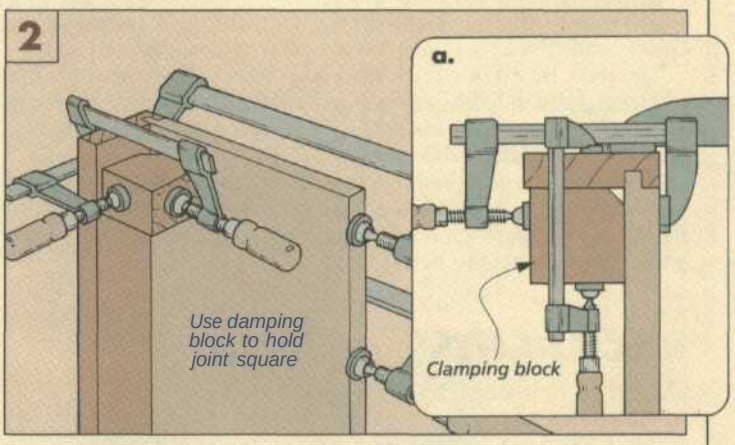

CUTTING RAISED PANELS SAFELY

• I was just getting ready to cut the raised panels for the doors on the Country Hutch when I heard "the voice." You know, the one in the back of your head that says, "This cut might be dangerous. Don't try it."

I stepped back to look at the setup a second time. Cutting the long sides of the panel wasn't a problem. But cutting the short ends, which are less than 6" wide, wasn't a good idea.

Riding on the short ends, the panel just wasn't stable — especially when you consider there's only 3/16" between the fence and the blade for the piece to ride on. (Not to mention that about half of this 3/16" includes the opening in the table saw insert.) Plus, to hold the piece tight against the rip fence, my hands would have to pass close to the blade.

I didn't really want to take the time to build and set up a special jig. But I wasn't going to attempt to cut the ends of the raised panels without some extra support. Fortunately, the solution I came up with was quick and simple.

First, I attached a taller auxiliary fence to the rip fence, see detail in Drawing below. Then I set the panel on the saw and held it tight against the fence.

While holding it in place, I clamped a couple wood handscrews to the panel so they rested flat on top of the auxiliary fence, see Drawing below.

The idea here is simple. Instead of trying to balance the panel against the fence, I used the handscrews for added support. They ride along the top of the auxiliary fence as the panel moves past the saw blade.

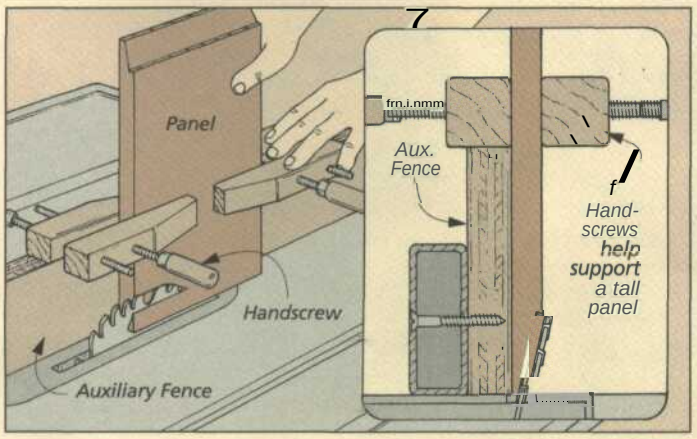

SANDING BEVELS

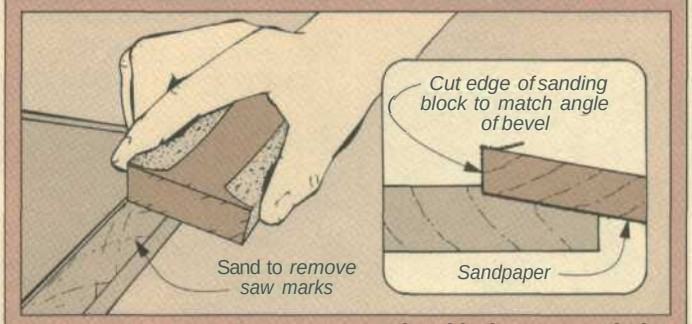

When cutting raised panels with the table saw, you often end up with saw marks left by the blade. The quickest way to remove these marks is to use a sanding block. It's a good idea to bevel the edges of this block so it squares up the shoulder created by the raised field of the panel, see detail above.

Note Board

Keep a memo pad and pen within easy reach.

You know how it goes. When the phone call is really important, you can't find anything to write with (or write on). This Note Board solves that problem. Besides holding a standard office calendar (8½" x 11"), it also has a shelf for a note pad and pen.

The Note Board is a quick weekend project There are only five different parts, and the joinery is quite simple. This means you can spend more time on the fun part — carving the wheat pattern along the top. (For more on this, see page 20.)

Of course, you don't have to carve the pattern. Instead, you could stencil it or use a wood burning tool. But if you do choose to carve the accent design, then read the carving article on page 20 *before* you begin building the Note Board.

BACK PANEL

I began the Note Board by gluing up a blank for a **back panel (A),** see Fig. 1. Ripping the blank to finished width is easy. Cutting the curves is a little more involved.

To lay out the curves, I used a half pattern, see Fig. 1. (Making a full pattern requires cutting *two* identical curves.) By flipping the half pattern over, the curves mirror each other exactly.

Note: To make the pattern, enlarge the detail in Fig. 1 on a photocopy machine until the squares are 1". Then glue it to a piece of cardboard (or Masonite) and cut the curve.

Trace the pattern on the blank and cut along the curves staying 1/16" from the line. Then sand up to the line with a drum sander.

Note: If you plan to carve the pattern, it's best to do it now, see page 20.

Now to complete the panel, rout chamfers along the front edges of both ends of the back panel, see Fig. 2.

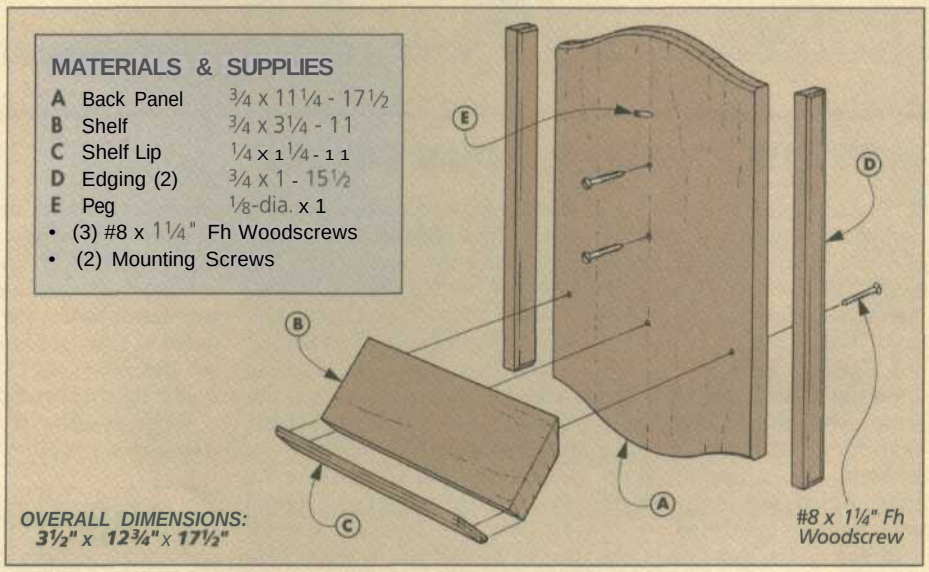

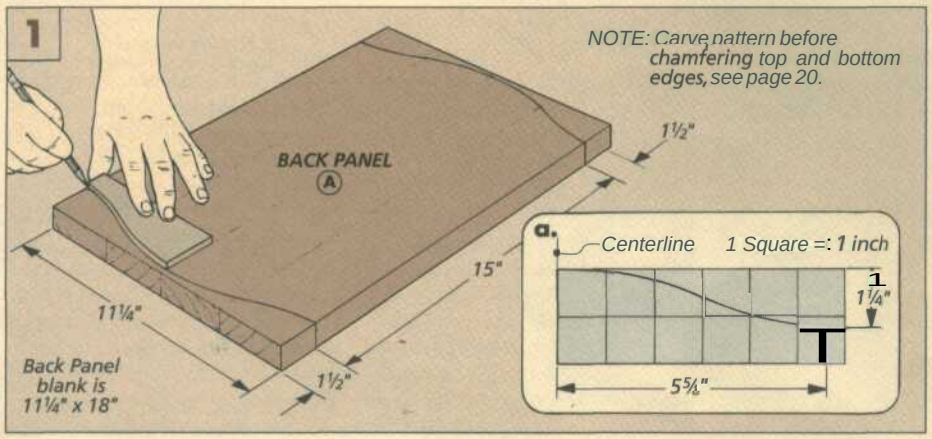

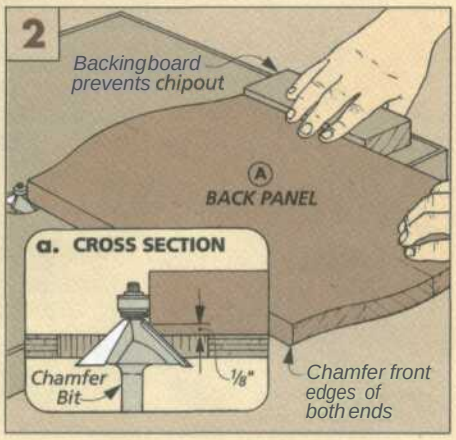

SHELF

A simple shelf is the first piece to be added to the back panel. Ifs attached at an angle and has a lip for a pen and a note pad.

Start by cutting the shelf (B) to rough size, see Fig. 3. (Later, one edge will be beveled, but it's easier to clamp the lip to the shelf while it still has square edges.)

Now, make the **shelf** lip (C) and glue it to the edge of the shelf, see Fig. 3. Once it's dry, the lip can be chamfered, see Fig. 3a. Routing this tiny piece is much safer now that it's been glued to the shelf. This way, the shelf can be used as a handle.

Next, I tilted the table saw blade to 45° and ripped the shelf to final width, see Fig. 3b.

To attach the shelf to the back panel, you can't just glue it in place. The problem is the grain on the shelf runs *across* the grain on the panel. The panel naturally expands and contracts across its width, and if the shelf is glued in place, this movement will eventually cause the joint to come apart.

The solution is to attach the shelf with screws, see Fig. 4. To do this, I first drilled the shank holes oversize. (This allows the panel to expand and contract.) Then I spot glued the shelf to the panel, see photo at right The glue temporarily holds the shelf in place while the pilot holes are drilled and the shelf is attached.

SPOT GLUING

A *To position the shelf, all you need are two drops of glue and some hand pressure. Later, it can be secured with screws.*

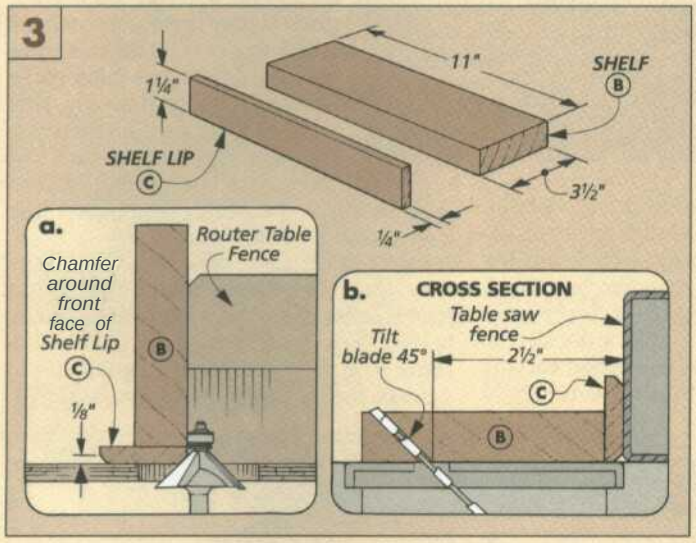

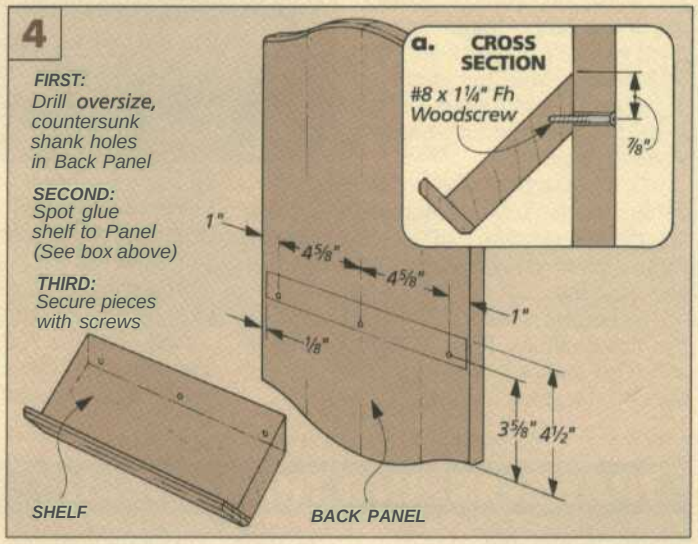

EDGING & PEG

The Note Board is almost done. All that's left are some decorative edging pieces and a peg to hang the calendar.

First cut two pieces of edging (D) to size, see Fig. 5. Then chamfer the edges, see Fig. 5a. (Note: Not all edges get chamfered.)

Now glue and clamp the edging to the panel, see Fig. 5b. Shop Tip: Let the glue set a bit before you attach each piece. This way, the edging won't slide around.

The last step is to drill an angled hole for the peg that holds the calendar, see Fig. 6.

For the finish, I applied a coat of Minwax Wood Conditioner, then two coats of their Colonial Maple stain. For a top coat, I used General Finishes' Royal Finish, see page 31.

To mount the Board, I simply screwed it to the wall, refer to the Exploded View. ❑

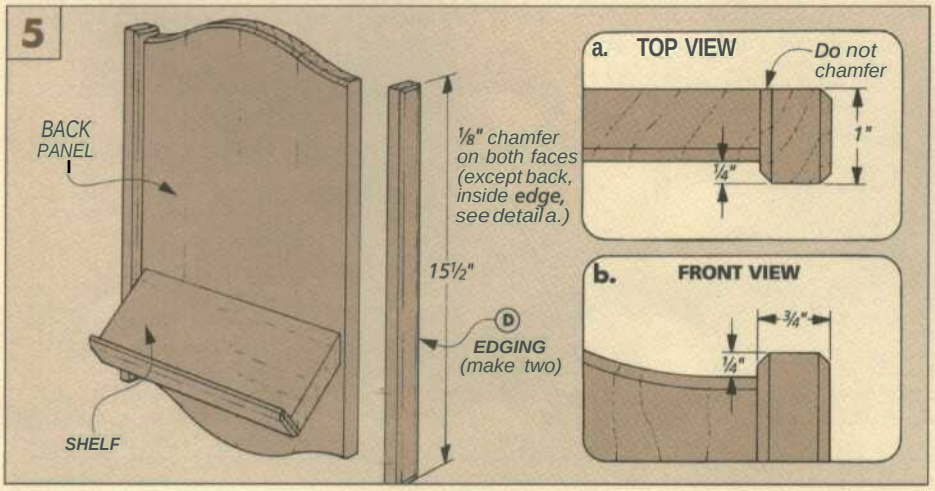

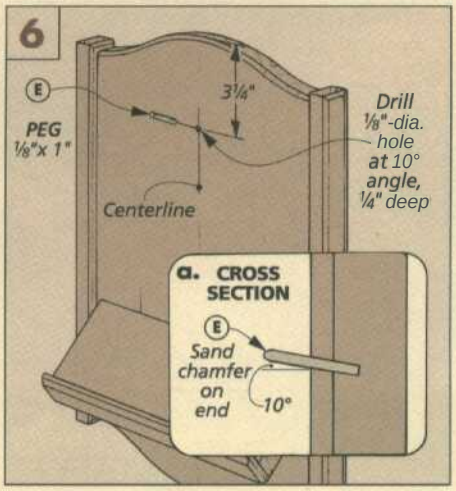

Accent Carving

Most people I've shown this carving pattern to have been eager to give it a try. The simple wheat pattern really looks "do-able" — and it is. In no time at all, you'll be able to master a few simple carving techniques so you can add a decorative accent to a project.

Carving this pattern doesn't require a large initial investment either. You only need one $10 carving chisel (for sources, see page 31) and a sharp utility knife. Plus some scrap pieces of wood to practice on.

WOOD SELECTION. But before getting started, I should mention something about the kind of wood to use. Choosing the right type of wood is just as important as choosing the right tool.

The perfect wood for this type of carving has two qualities. First of all, it should be soft. This makes it easier for you to control the chisel and make the cuts.

The second quality to look for is a tight, straight grain pattern. (Or better yet, no visible grain pattern at all.) In fact, woods traditionally used for carving, like basswood, have barely noticeable grain patterns.

PINE. For the Note Board, I decided to use pine. Pine can also be a good carving wood. But you have to choose the right boards. To look at the Note Board on page 18, you might think it was a good project to use some scraps of pine lying around the shop. But that's not necessarily the case.

Some pieces of pine are a lot harder than others. The harder boards can be identified by their dark grain patterns. This darker grain (called latewood) contains resins that make it much harder than the lighter and softer earlywood. Carving through latewood is difficult. So when you pick out your pieces, pick out the softest boards with lightest grain pattern you can find. The result will be a crisp and clean carving.

PROCEDURE. Once you've selected the wood, the procedure is simple. First, transfer the pattern onto the panel blank, see box below. Then carve the design. (But before starting on the real thing, it's a good idea to practice the technique first.)

TRANSFERRING THE PATTERN

If you're more artistic than I am, you won't need a pattern to do this carving. It's simple enough to draw freehand (or you could even create your own design). But just in case, there's a half-size pattern below.

To use this pattern, you'll need to enlarge it on a photocopier until it's 11¼" wide — roughly 200%. (Or you can order a full-size pattern, see page 31.)

To get the pattern on the wood, I thought about using carbon paper. But carbon paper leaves a waxy or greasy residue that's hard to erase.

Instead, I used transfer paper. (See page 31 for sources.) Transfer paper works just like carbon paper, but better. It leaves "dry" lines you can erase easily.

To transfer the pattern, first tape the photocopy to the panel so the curve on the pattern lines up with the curve on the top of the panel, see photo at right. Then slip the transfer paper between the pattern and the wood with the dark side down. Now trace the pattern with a pencil. The transfer paper leaves a light line wherever you push down with the pencil.

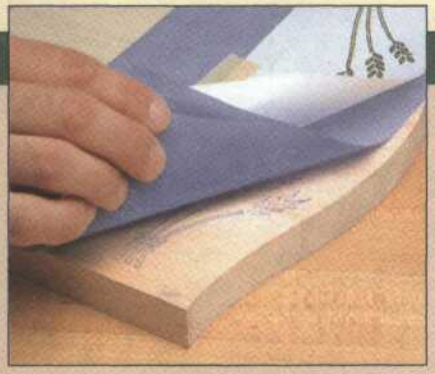

{ To get the pattern onto the blank, I used transfer paper. It works just like carbon paper but erases much easier.

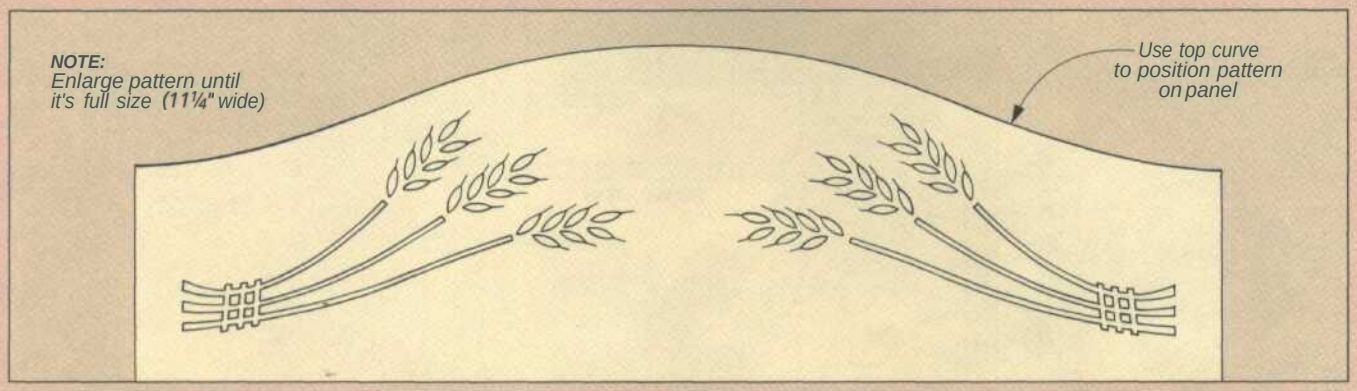

TECHNIQUE

I tried carving this pattern with all sorts of knives and chisels. The best tool was an inexpensive V-parting chisel. (For sources, see page 31.) Its palm-handle grip is comfortable and easy to control.

There are two basic cuts needed to carve the wheat pattern. The first is a long shallow cut for the stalks, see Fig. 1. I found it easiest to hold the chisel at a low angle with one hand and guide it with the other. But don't try to make the entire cut all at once. Ifs hard to stop the cut cleanly. Instead, carve most of the stalk in one direction. Then come back from the other direction to finish it off.

For the stalks, the important thing is to keep the lines smooth and even. To do this, the carving tool must be held at a consistent angle. If you want the line to widen (as on the ends of the stalks), just raise the handle a little. Then the chisel will dig in deeper and make a wider cut.

The second cut shapes the kernels of wheat. This is also a two-step process, see Fig. 2. Start by pushing the tool into the wood about half the length of the kernel. Then repeat this cut coming from the opposite direction. A single oval-shaped chip will pop out where the two halves meet. But keep the angle of the tool the same for each cut, see Fig. 2a. You'll get a cleaner carving.

There's one last detail you may want to include. To make the kernels more realistic, I scored a simple line through each with a utility knife, refer to Step 5 below.

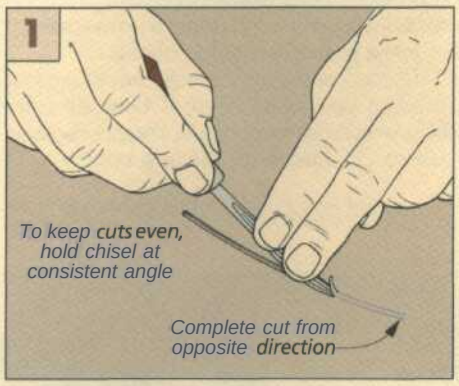

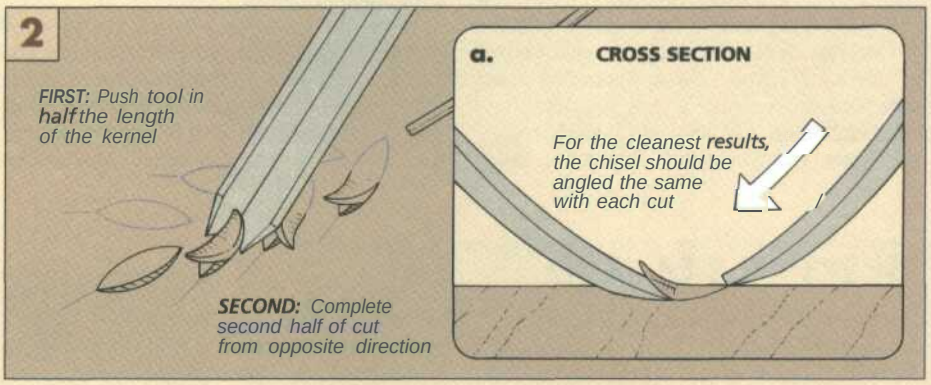

STEP-BY-STEP

You might be tempted just to "jump in" and start carving this wheat pattern. But in order to avoid chipout, it's important to follow a certain sequence.

I started with the stalks. This curved cut is the hardest to control. And if you carve the ties before the stalks, there's a good chance the wood will chip out

Next, I worked on the ties that cross the stalks. This is also a two-step process — if s too easy to "overshoot" the cut

Finally I cut the kernels of wheat. There isn't any particular sequence here. But make sure you don't cut the kernels too close to each other. Any closer than ⅛", and the pine may chip out. ❑

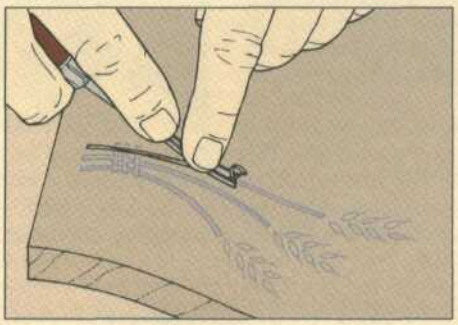

1 *To carve the wheat, first transfer the pattern to the panel blank. Then begin by cutting the stalks. But don't cut the whole stalk at once. Stop about 1" short.*

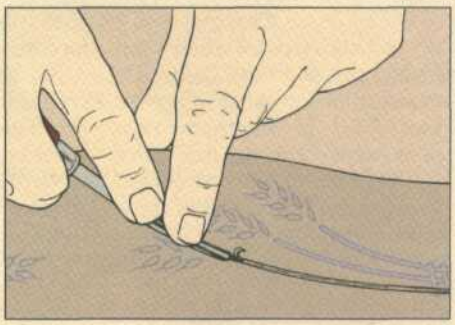

2 *Complete the stalk by starting from the opposite end and connecting with the first cut. For an even line, be careful to hold the chisel at the same angle as before.*

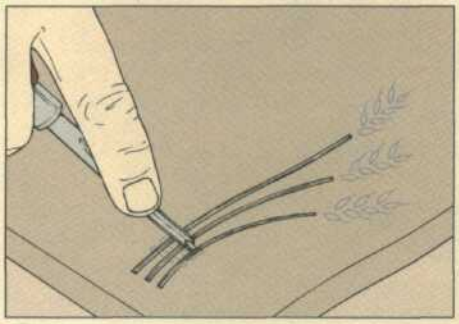

3 *With all the stalks complete, next carve the ties. Again, cut these from both directions. This gives you better control of the depth and length of the cut.*

4 *Carving the kernels is the next step. What you want is to cut a single, oval-shaped chip. This is best done in two steps, keeping the angle of the chisel consistent.*

5 *If you would like to add "beards" to the kernels of wheat, simply take a sharp utility knife and make a scoring cut through the center of each kernel.*

Sanding Tips

The more you know about the process, the less time it will take.

How often do you hear someone say, "You did a great job of sanding that project"? That's the problem with sanding. For something that takes so much time and creates so much dust, it goes unnoticed.

Of course, if you did a poor job of sanding, it *would* get noticed. That's because there isn't any finish that will hide a poor sanding job (except maybe paint). Instead, a finish will emphasize any irregularities or blemishes on the surface of the workpiece (like scratches and glue).

With all the power sanders and hand sanding products available these days, you might be tempted to think another tool will solve your sanding headaches. But while these tools can help with the elbow grease, the process is still the same. And understanding this process will save you time whether you're using a power sander or just a plain old sanding block.

The following are a few notes and tips we thought you'd find helpful. They describe how we get the sanding job done in the least amount of time. With the best results.

GETTING STARTED

Many woodworkers will put off sanding for as long as possible. But after the project has been assembled, the sanding becomes much more difficult. So I always try to get started sanding as soon as possible.

For example, it's much easier to sand a large panel when it can be laid flat, see Tip 2 below. Or to sand a raised panel before it's assembled in its frame, see photo above. But you don't ever want to alter the fit of a joint. So I wait to sand the rails and stiles until after assembly.

There's something else you should think about before starting: the lighting. You may take this part of sanding for granted. But if you aren't able to really see the surface of the wood, you may discover a scratch, dent, or glue spot you missed when it's too late — after the finish is dry.

So make sure your sanding area has plenty of light. But not overhead light. The light should come across at a low angle. This type of light will create shadows so that any ridges, dips, and deep scratches will stand out.

Lighting your work. *A light can really help you see scratches if it's positioned correctly. When directly overhead, many scratches will be barely visible. But bring the light dawn and shine it across the workpiece, and it will create shadows that highlight any scratches.*

QUICK TIPS

1 Don't sand wood like you scrub the floor. Use long, even strokes. This way, you'll be sanding in a straight line *with* the grain, not going sideways across the grain.

2 Sand glued-up panels (and large pieces) *before* cutting them to size. This keeps the thickness more consistent around the edges, which tend to end up a little thinner.

3 Don't sand up to the edges of a board with a power sander (unless you want to round them slightly). Instead, use a sanding block.

4 If you're sanding with 150-grit and you find a deep scratch, don't keep sanding at 150. Instead, use a coarser grit to remove the scratch. Work back up to 150 and continue.

5 If you've stained a project, be careful when sanding between coats of finish. And avoid the edges if possible. (Stay about ⅛" away.) It's too easy to cut through the finish and remove the stain.

6 To get the end grain of a workpiece to accept a stain the same as the face grain, sand it a couple grits finer.

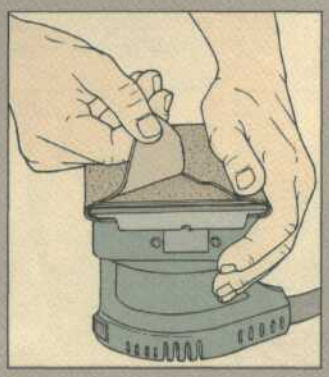

7 If using regular sandpaper, put four layers on a sander at the same time. Then rip off the top layer when it's worn.

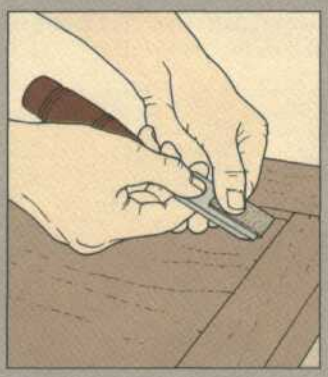

8 To sand "in tight" to a corner or up to an edge, just wrap sandpaper around a dull chisel or a putty knife.

THE BIG PICTURE

If you don't want to waste a lot of time sanding, then you need to understand "the big picture." I *used* to think of sanding as a one-step process — just getting the wood ready for a finish. But now I like to think of it as two separate steps.

FIRST STEP. The goal of the first step is simple: sand out *all* of the blemishes. By blemishes I mean any deep or cross-grain scratches as well as nicks and dents. It also includes any burns and lay-out marks too.

The first step should be tackled with the coarsest grit you plan to use. Whether it's 100 or 150, don't switch to a finer grit until all the blemishes are gone. Switching too early just means you'll spend more time sanding.

SECOND STEP. When all of the blemishes have been removed, it's time to sand with finer grits. This is the second step of the sanding process. The goal now is to make all the scratches finer and finer so they won't be visible *after* the finish is applied.

Move to the next finer grit when you've sanded out all the scratches from the previous grit. (Good lighting and close inspections are important here.) And don't skip more than one grit In the long run, you'll spend more time sanding. Not less.

ADHESIVE-BACKED PAPER

If you've ever used a finish sander, then you've probably struggled with getting a fresh piece of paper under the clips of the sander. It's one of those little annoyances that slows you down a bit.

For about four years, we've been using adhesive-backed sandpaper in our shop, for sources, see page 31. This paper has reduced the time we spend sanding because it's so much quicker to change the sandpaper. All you have to do is peel the paper off and stick a new piece on.

A *Adhesive-backed paper sticks tight to a sander or sanding block so it won't slip. Plus it's quick and easy to replace.*

EFFICIENT SANDING

When sanding, it's good to keep the big picture in mind. But there are times when it's more efficient to bend the rules a bit.

AGAINST THE GRAIN. One rule you'll hear often is to only sand with the grain. But sometimes there's a lot of wood to remove, like on an edge-glued panel with a lot of ridges.

In these situations, sanding *with* the grain has some drawbacks. If s slow. And there's also the tendency to create dips and valleys across the panel.

So when there's a lot of wood to remove, I'll start by sanding *across* the grain first, see Drawing at right But don't sand any more than needed. Remember, you do have to sand out the cross grain scratches by going back and sanding with the grain.

END GRAIN. There's another rule I bend a little. It has to do with end grain. Instead of starting with a coarse grit like 100, I sand with a medium grit, say 120 or 150. This way, I have to spend more time on the initial sanding. But I think it's faster in the long run. Here's why.

Coarse grits are good for removing nicks and really deep scratches, but they also create "deep" scratches that have to be sanded out with finer grits. The problem is end grain is harder than face grain. So the scratches are harder to sand out.

WORN PAPER. There *is* a rule I always follow. I change my sandpaper often. It's tempting to keep the paper on a little longer because "if s just going to sand finer anyway." But that's not how sandpaper works.

As the paper gets worn, *some* particles may be smaller. But they're also becoming dull. So instead of finer and finer scratches, what you end up doing is polishing or burnishing the wood instead.

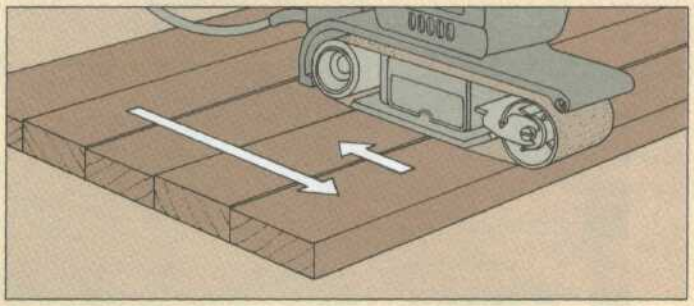

Bending the rules. *If there's a lot of sanding to do, it may be faster to sand across the grain first But you will have to go back and sand with the grain to remove these cross grain scratches.*

WHEN TO STOP

When should you quit sanding? The answer depends on the finish. There are two questions to consider: Are you going to stain the wood? And what type of finish will you use?

STAINING. When using a pigment stain (as opposed to a dye), you have to keep a couple things in mind.

First, how much you sand affects how dark the stain will end up. A stain sits in the pores and scratches of the wood. So the finer you sand, the fewer places there are for the stain to sit and the lighter the final color.

Also keep this in mind. When staining a piece, everything has to be sanded to the same grit. Otherwise, the wood won't absorb the stain evenly. (The exception to this is end grain, see Quick Tip 6 in box at left.)

CHOOSING A FINISH. Another factor that determines how fine you should sand is the finish you intend to use. The thicker the finish, the less you have to sand.

With oil finishes (finishes that penetrate the wood and build almost no film at all), what you end up feeling is the wood, not the finish. So if you want it to feel smooth, you will need to sand more. I usually sand to about 220-grit. Then for the first coat of finish, I sand it in wet with 320-grit wet/dry sandpaper. This leaves the surface very smooth.

With a film finish like varnish, the finish needs to be smooth, not the wood, see Drawing at right. So I end up sanding the wood to about 120-grit or 150-grit. This may sound too coarse, but once the finish is on, you won't be able to see or feel the scratches anyway. To get the project smooth, lightly sand the finish between coats. ❑

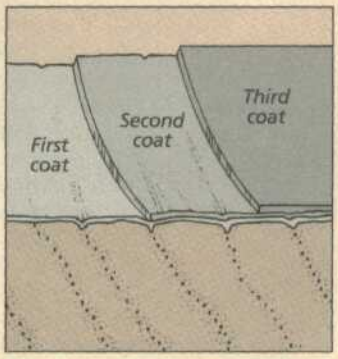

Don't sand too much. *With a varnish or polyurethane, sanding scratches will be filled in by successive layers of finish.*

Finishing Cabinet

This *cabinet does more than store your finishing supplies. It features a pull-out tray, turntable top, and it can be rolled out of the way when not in use.*

When it's time to apply a finish to a project it seems like I have to hunt for an hour to find all the things I need. My brushes hang in one place while the stain and varnish I'm looking for are stored somewhere else.

Then it's another challenge trying to find a clean place to set the project while applying the finish. I thought about using my workbench. But I'm usually working on another project making all kinds of dust. And unless I'm really careful, it's pretty easy to spill varnish or stain all over the top.

So I decided it was time to organize my finishing "tools." That's what this Finishing Cabinet is designed to do. It stores all the supplies needed to finish a project in one handy location with room on top to hold most projects.

CABINET. All of my finishing supplies fit in this cabinet that's basically a big wooden box on wheels. The doors and sides are built with pegboard panels that provide ventilation inside the cabinet. The panels are also a convenient place to hang brushes, masking tape, and other supplies on the outside.

Just above the doors is a slide-out tray. It pulls out from either side of the cabinet and holds your finishing supplies while you work.

TURNTABLE. Another useful feature we built into this project is the turntable top. This is especially handy for small projects — you can sit in one place and still reach all sides of the project.

EXPLODED VIEW

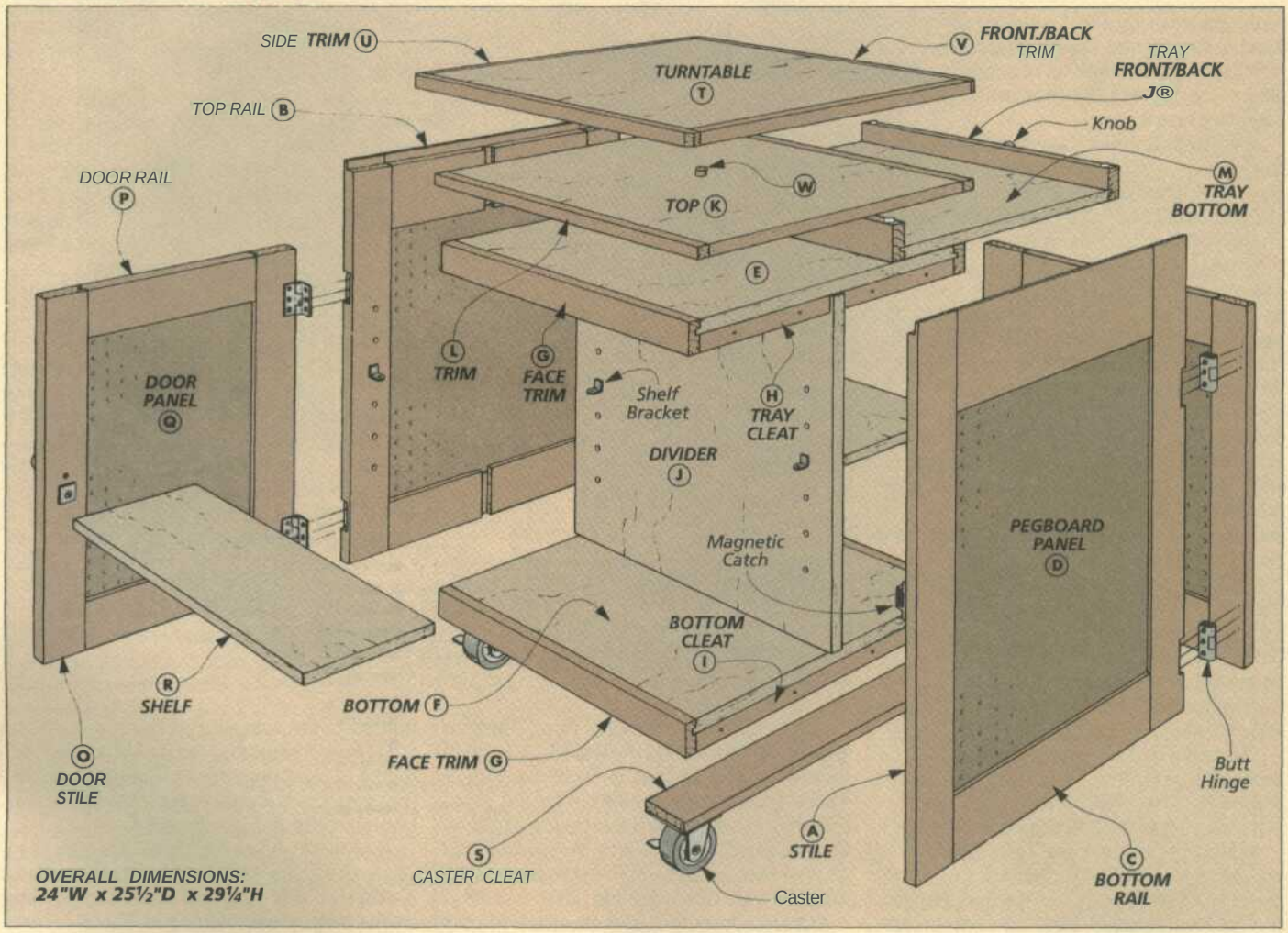

CUTTING DIAGRAM

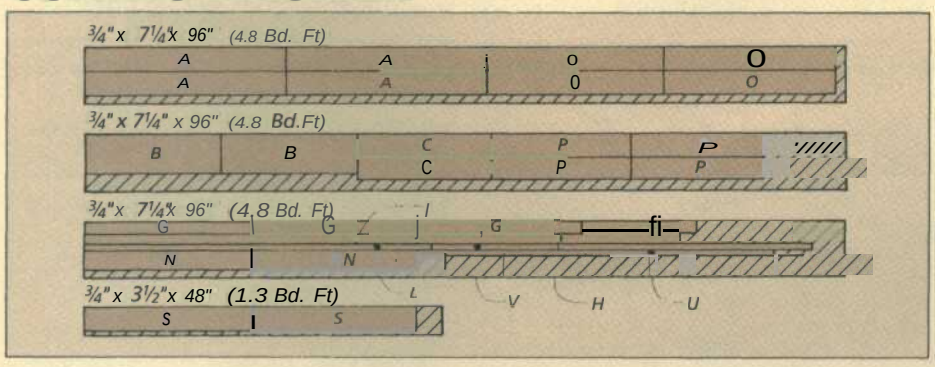

MATERIALS

A	Stiles (4)	¾ x 3 - 25¼
B	Top Rails (2)	¾ x 5 - 17
C	Bottom Rails (2)	¾ x 3 - 17
D	Pegbd. Panels (2)	¼ pegbd. - 17 x 17¾
E	Tray Support (1)	¾ ply - 21 x 21½
F	Bottom (1)	¾ ply - 21 x 21½
G	Face Trim (4)	¾ x 1¾ - 21
H	Tray Cleats (4)	¾ x 1 - 10⅛
I	Bottom Cleats (2)	¾ x 1 - 21
J	Divider (1)	¾ ply - 21½ x 19½
K	Top (1)	¾ ply - 22 x 21
L	Trim Pieces (2)	¾ x ¾ - 22
M	Tray Bottom (1)	¾ ply - 20 15/16 x 21½
N	Tray Fr./Bk. (2)	¾ x 2 3/16 - 20 15/16
O	Door Stiles (4)	3/4 x 3 - 22
P	Door Rails (4)	¾ x 3 - 17
Q	Door Panels (2)	¼ pegbd. - 17 x 16½
R	Shelves (2)	3/4 ply - 9½ x 20⅞
S	Caster Cleats (2)	¾ x 3 - 21
T	Turntable (1)	¾ ply - 22½ x 22½
U	Side Trim (2)	¾ x ¾ - 22½
V	Fr./Bk. Trim (2)	3/4 x 3/4 - 24
W	Pivot Pin (1)	¾-dia.dowel x 1½

SUPPLIES

- (4) 1¼"- dia. Wood Knobs
- (12) ⅞"- dia. Nylon Tack Glides
- (4 pr.) 2" Butt Hinges
- (16) #6 x ⅝" Fh Woodscrews
- (2) Magnetic Catches
- (8) Shelf Supports
- (4) 3" Swivel Casters with Brakes
- (16) ¼"- dia. x 1½" Lag screws
- (18) #8 x 1¼" Fh Woodscrews
- (6) #8 x 1½" Fh Woodscrews
- (14) #8 x 2" Fh Woodscrews

Also Need:

- One 4' x 8' sheet W plywood
- One 4' x 4' sheet ¼" pegboard
- ¾"- dia. Dowel

CABINET

I started work on the finishing cabinet by making two identical side assemblies. Each side assembly is made up of two stiles (vertical pieces), two rails (horizontal pieces), and a pegboard panel.

The key to holding these pieces together is a groove on the inside edge of the stiles and rails. This groove holds the panel in place and forms a "mortise" for the tenons on the ends of the rails, see Fig. la.

Since the groove is the same size on all the pieces (¼" wide x ¼" deep), I started by cutting all the stiles and rails (A, B, and C) to their finished width and length, see Fig. 1. Then I cut a centered groove on the inside edge of all the pieces.

After the groove has been cut in the frame pieces, the next step is to cut tenons on the ends of the rails to fit the grooves in the stiles. With the tenons complete, the pegboard panels (D) can be cut to size. Then the entire side assembly can be glued and clamped together.

After the sides have been assembled there's still two more things that need to be done before they're complete. First, a rabbet needs to be cut on the top inside face of both side assemblies, see Fig. 1b. The rabbet is sized to accept a ¾" plywood top that's added later, refer to Fig. 6.

Second, a dado is cut down the center of both side assemblies, see Figs. 1 and 1c. A divider fits in this dado when the the cabinet is put together, refer to Fig. 4.

TRAY SUPPORT/BOTTOM. With the sides complete, I turned my attention to making the tray support (E) and bottom (F), see Fig. 2. They're made from ¾" plywood and connect the two side assemblies. Since they're the same size (21" wide x 21½" long), I cut both at the same time.

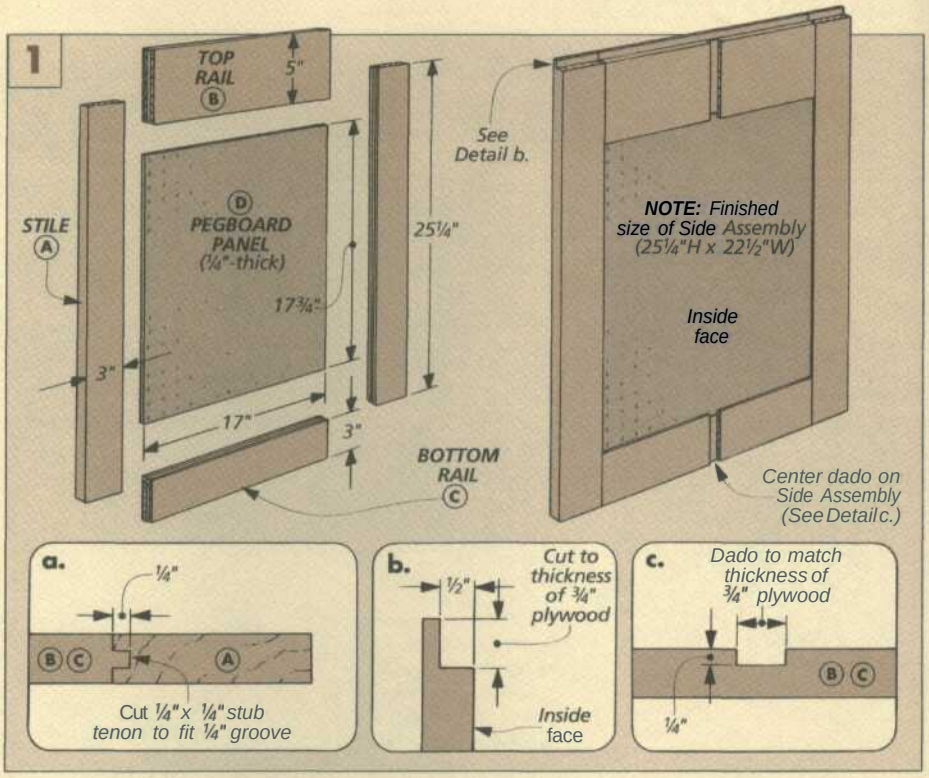

But before the tray support and bottom are attached to the side assemblies, I added face trim (G) to both pieces, see Fig. 2. These trim pieces are all cut to the same length (21"), and hide the plywood edges on the support and bottom. A tongue and groove joint helps hold the trim in position until the glue dries, see Fig. 2a.

CLEATS. Once the trim is attached, the next step is to add cleats to the tray support (E) and bottom (F). These pieces of ¾" stock are used to attach the tray support and bottom to the side assemblies.

However, since you need a W gap for the divider, I used four tray cleats (H) on the tray support but only two cleats (I) on the bottom, refer to Figs. 2b and 4.

ASSEMBLY. After the cleats are glued in place, the cabinet is ready to be assembled. To do this, first glue and screw the bottom to the side assemblies, see Fig. 3. Next, measure the distance between the dadoes in the side panels and cut the divider (J) to fit, see Fig. 4. (21½" wide x 19½" long.)

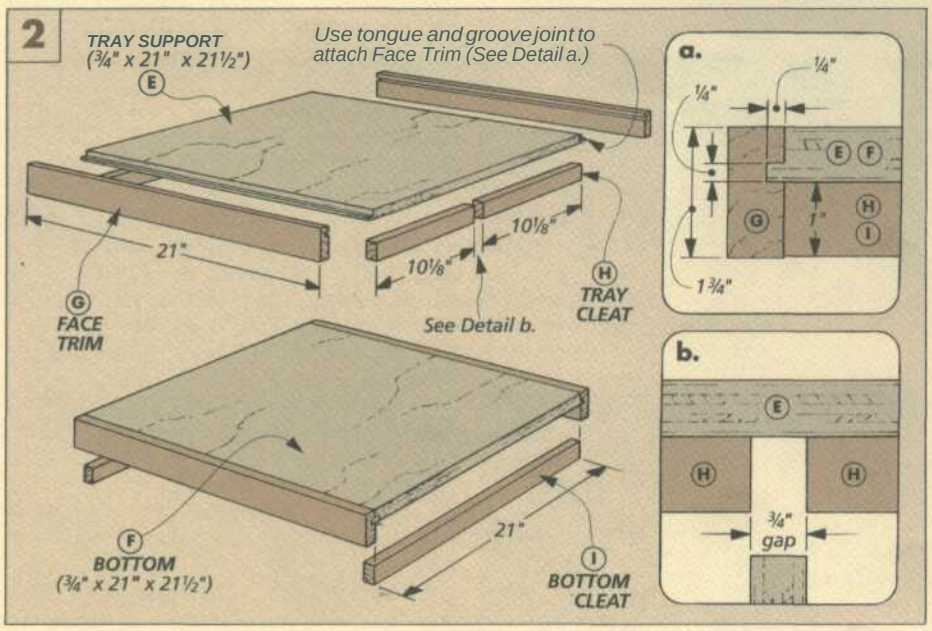

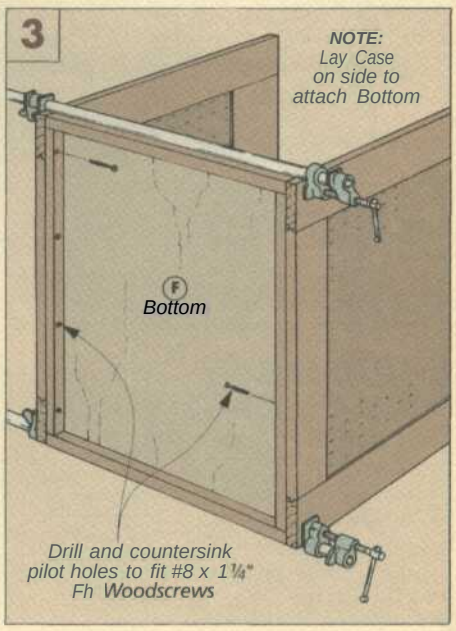

Then slip the divider into the dadoes and glue and screw it to the bottom.

Now you can use the divider to help align the tray support in the cabinet To do this, set the tray support on the divider so the cleats glued on the bottom straddle the divider, see Fig. 4. Then align the bottom of the cleats with the bottom edge of the top rails and screw the tray support to the side assemblies and divider, see Fig. 4a.

TOP. All that's left to complete the cabinet is to install a ¾" plywood top. To determine the size, I first measured from shoulder to shoulder between the two rabbets on the side assemblies to get the width (22"). Then to find the length, I measured the width of the sides and subtracted 1½" for trim pieces added later. Now the top (K) can be cut to size (22" wide x 21" long), see Fig. 5.

To finish the top, I glued on trim pieces **(L)** to the front and back edges, see Fig. 5. Then simply glue and screw the top to the cabinet, see Fig. 6.

TRAY

With the cabinet complete, the next step is to make a sliding tray. It fits between the top (K) and tray support (E). This tray pulls out from either side and holds your finishing supplies while you use them.

TRAY. The tray is a piece of ¾"-thick plywood with identical front and back pieces installed on the ends. These front and back pieces have plastic glides mounted on top which help the tray slide easily in the cabinet. And they keep it from sagging when it's pulled out

To determine the size of the tray bottom **(M)** start by measuring the width of the opening and subtract 1/16" for clearance, see Fig. 7. (My tray bottom was 20 15/16" wide.)

Finding the length of the tray bottom is a bit trickier. That's because you need to take into account the joinery and the thickness of the front and back pieces. So I measured the depth of the cabinet, subtracted 1", and cut the tray bottom to length (21½"). Then to complete the tray bottom cut ¼" tongues on two edges, see Fig. 7.

The next step is to cut the tray **front/back** (N) pieces to size. The length of the pieces is the same as the width of the tray bottom (20 15/16"). But to determine the height (width), first measure the opening in the cabinet. Then subtract 5/16" to allow for the thickness of the glides (¼") plus 1/16" for clearance, see Fig. 7a. (In my case 2 3/16".)

Now a ¼"-wide groove can be cut on one face of each piece to fit the tongues cut on the tray bottom, see Fig. 7a.

After gluing the front and back pieces to the bottom, I screwed a knob on both. Then to complete the tray, I added plastic glides to the top edge of the front/back pieces, see Figs. 7 and 7a.

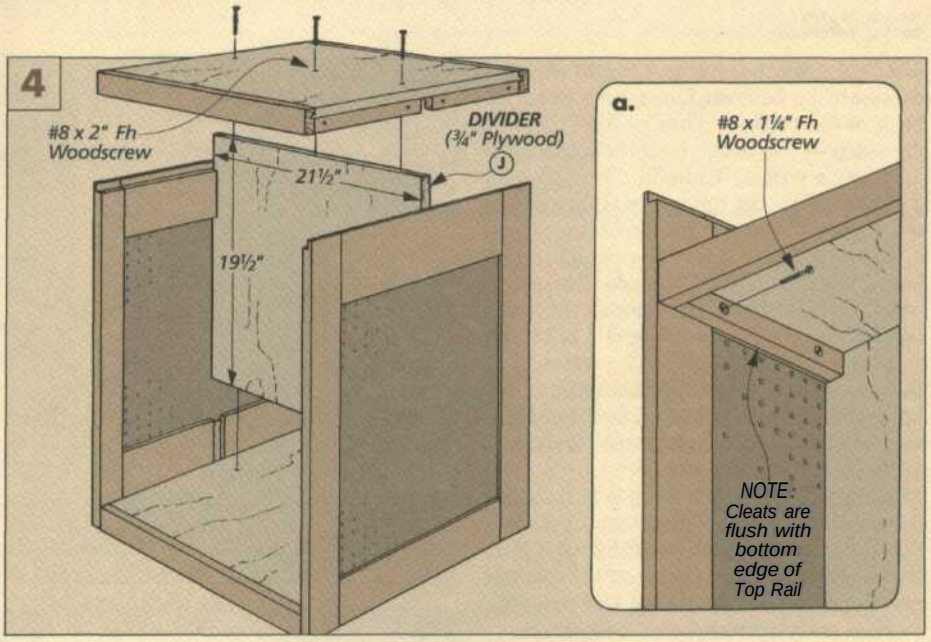

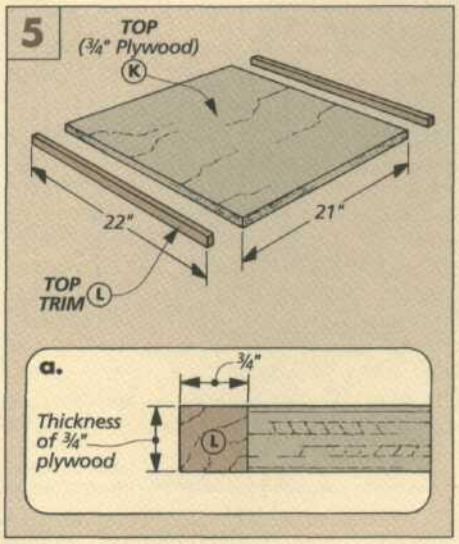

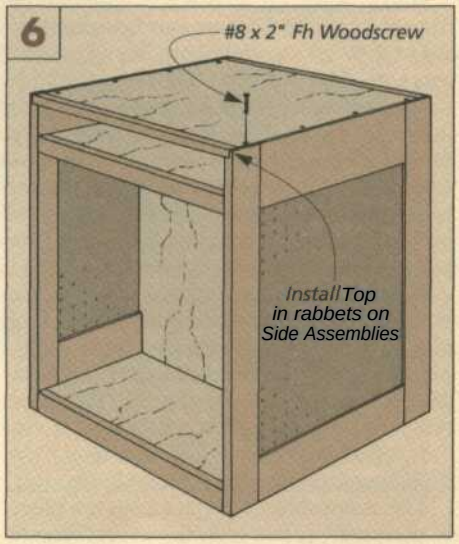

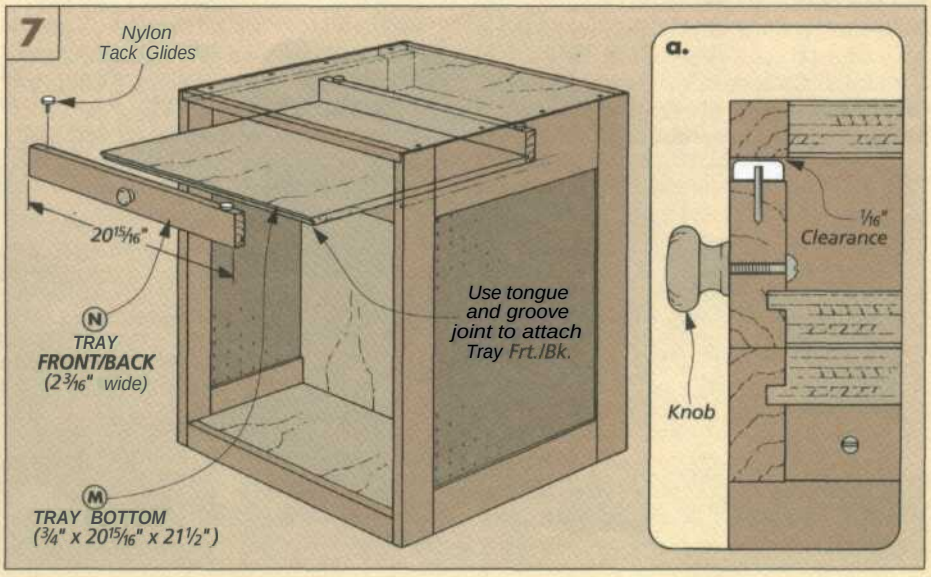

DOORS

After completing the tray, I began work on the doors. I made two. One for the front and back of the cabinet They're built just like the sides — frame and panel construction.

FRAME & PANEL. To build the frames for the doors, first cut the stiles (O) to match the distance from the bottom of the cabinet to the top edge of the tray support (22" long), see Fig. 8. Then to make the overall width of the finished door match the width of the cabinet, I cut the rails **(P)** 17" long.

After cutting grooves in the edges of all the pieces and tenons on the ends of the rails, the door panels (Q) can be cut to size, see Figs. 8 and 8a. Now glue and clamp all the door pieces together.

HARDWARE. The next step is to hang the doors. A pair of butt hinges mortised into the front edge of the stiles (the thickness of the hinge) holds the doors on the cabinet, see Fig. 8. Then I installed the magnetic catches and wood knobs on both doors.

SHELF. After the doors are mounted to the cabinet, two shelves can be added inside. They sit on shelf supports spaced 2" apart, see Fig. 9.

Normally you'd drill shelf support holes in the sides of a cabinet But that won't work here since the sides are Masonite panels — not solid stock. Instead, I drilled one set of holes on the side rails (A) and the other set in the divider (D). Then install the supports in the holes and cut the shelves (R) to fit.

CASTERS. With the shelves cut to size, the next step is to install casters. To do this, first glue and screw two cleats (S) to the bottom of the cabinet, see Fig. 9. Then use ¼"-dia. lag screws to attach the casters. (For more on casters see page 31.)

TURNTABLE. What I like best about the Finishing Cabinet is the turntable top.

The turntable **(T)** is just a square piece of plywood cut to match the overall size of the top of the cabinet (22½" x 22½"). To hide the plywood edges, they're covered with trim **(U)** and (V), see Fig. 10.

GLIDES. Once the trim is in place the next step is to install the plastic glides in a circular pattern. The only problem is the nails on the glides are too long. So I clipped the nails and drilled pilot holes before nailing the glides to the turntable, see Fig. 10a.

Next, I used a Forstner bit to drill a W-dia. hole ½"-deep in the turntable and a hole through the cabinet top, see Figs. 10 and 11.

Finally, a pivot pin **(W)** can be cut to size and glued in the turntable, see Fig. 11. O

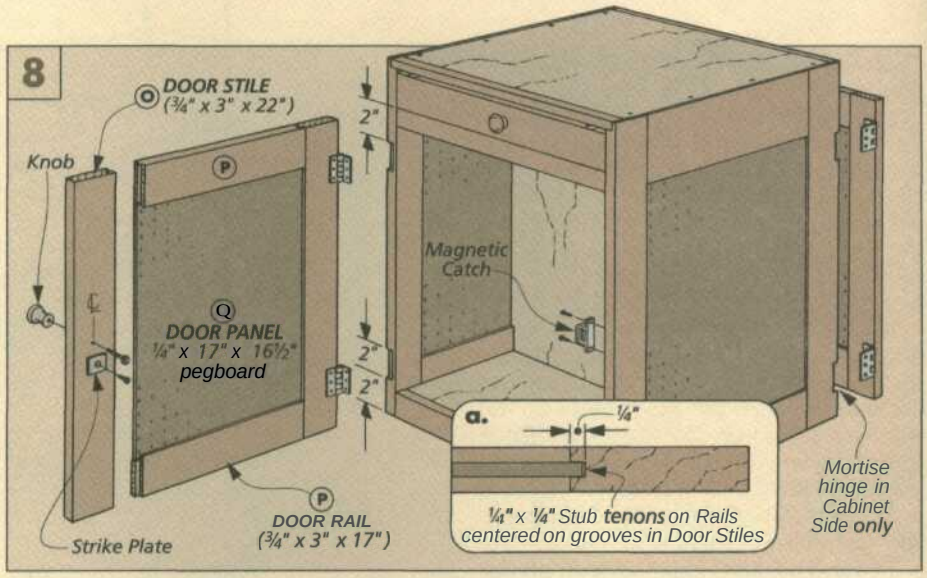

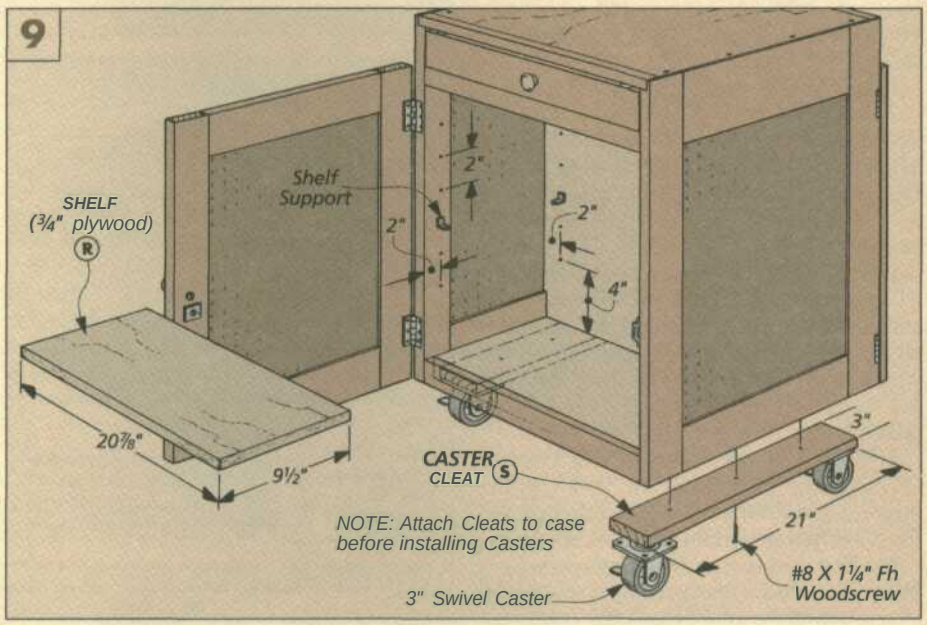

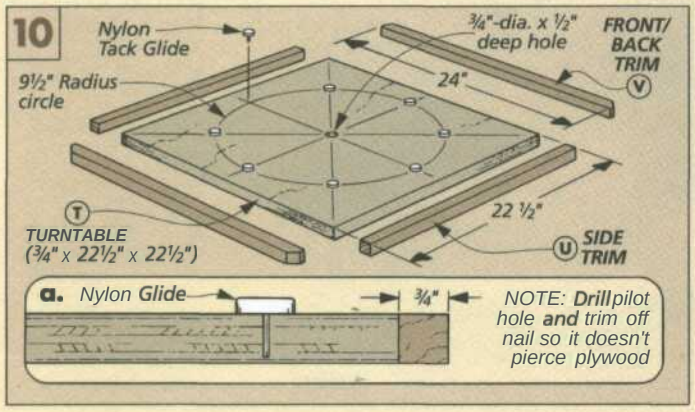

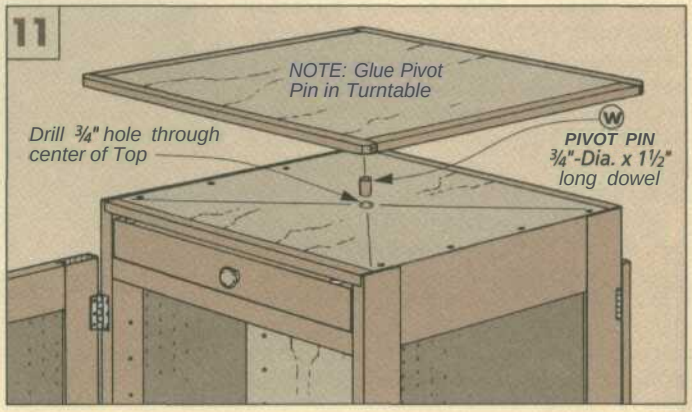

Talking Shop

PAMPERING PINE

• Some people think of pine as a "utility wood." You know, shelves in the garage, a table in the laundry room, or saw horses in the shop. But I also like to build furniture out of pine. That means "rethinking" the way things get done in the shop. Let's face it, pine's a soft wood with special requirements.

HANDLING

One requirement is that you have to handle pine more carefully than other woods. This can make a big difference in how much work there will be when it comes time to sand and finish it.

The problem is pine dents easily — it doesn't take much to scratch and break the fibers. So to make the shop "pine friendly," I first give it a good cleaning. I put away tools I'm not using and sweep off the bench. Chips and dried glue that I don't normally bother with get cleaned up.

Also, on a big project like the Country Hutch, I'll use a sheet of plywood for a "furniture sled." The project sits on the plywood instead of the concrete floor. That protects the ends of the boards from chipping out when sliding the project around.

But you can't avoid scratches and dents completely. They're inevitable — but not fatal. Most scratches can be sanded out quickly. And most dents can be removed too. I use a hot iron and a damp cloth. The dents soak up moisture from the steam until they disappear.

TECHNIQUE

Just as important as handling pine is how you work it The first thing I do is make sure the table saw blade is sharp. A dull blade tears the soft fibers instead of cutting them clean.

Also keep an eye on pitch buildup on the saw blade. It creates more resistance during the cut and the wood tends to burn. Note: An easy way to remove pitch buildup is to soak your blade in a common household cleaner like Formula-409.

Drilling pine can also be a little tricky. When I used a new brad point bit on the Country Hutch (refer to page 6) instead of starting the hole cleanly, it took chunks out of the wood. I found it helped to first run the hand drill in reverse. That way the points on the bit scribe the outside diameter of the hole slicing the wood fibers.

GLUING & SANDING

Just as the fibers in pine get torn when cutting and drilling, you can also tear them out when removing dried glue — especially if you try to scrape it off.

So first I make sure not to use too much glue on the joints. And any excess glue is cleaned up *just* before it dries completely. Removing the excess now prevents tearing the fibers later.

SANDING. Sanding pine has its own special challenges (see page 22 for sanding tips). Normally I'd use a finish sander to complete a project But on pine it leaves nearly invisible swirl marks — until it's stained. So I finish sand my projects by hand.

It's also a good idea to use a sanding block when sanding pine. That's because it doesn't sand evenly. Pine is made up of both soft and hard fibers (early and late wood). When you sand without a block, you remove more of the early wood because it's softer. What you end up with is a wavy surface instead of a smooth flat one.

FINISH

When finishing pine, there are a couple things to keep in mind that will give you a better looking project.

First, pine doesn't absorb stain evenly so you get dark blotches on the wood. Try using a stain controller (refer to page 15). It evens out the amount of stain that can soak into the pine.

Second, pick lighter colored stains if possible. They don't highlight missed dents, broken fibers, or swirl marks as much as dark colors.

RIPPING CUPPED BOARDS

• *After reading the Shop Notes section of Issue 93, I have a question about ripping cupped boards. I like to have the cup facing up. But you show it being ripped with the cup down. What's the best method for safely ripping a cupped board?*

Bruce Degarmo
Janesville, Wisconsin

Actually, Bruce, I think both methods have advantages and disadvantages.

CUP DOWN. Ripping with the cup down supports the workpiece on two edges. So it's stable for most of the cat But the last few inches can cause problems.

As you complete the cut, the piece between the fence and the blade can fall down and bind against the blade. To reduce the potential for kickback, I'll shove the workpiece quickly through the last few inches of the cut (from behind, not on top).

CUP UP. The other method, ripping with the cup up, eliminates the binding and kickback at the end of the cut By holding the board firmly agaist the table and fence the pieces tend to fall away from the blade.

But it seems like the board is less stable during the entire cut — not just the last few inches. So the chance for the board to bind is greater (and so is the chance for kickback).

BAND SAW. Probably the best (and safest) way to rip a cupped board and avoid kickback is not to use the table saw at all.

Instead, set up the band saw and rip the board to size.

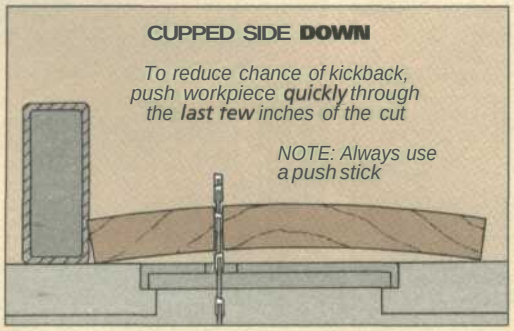

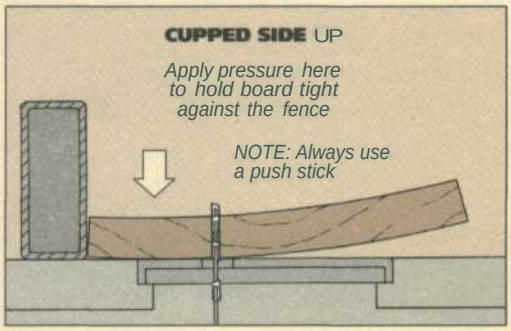

Circle Sanding Jig

The circle sanding jig sent in by Ron Hale of Joshua Tree, California works great. It allows you to accurately sand circular shapes on a disc sander.

The jig consists of two sliding tables. A base table that slides side-to-side in the miter slot on the disc sander. And a top table that holds the work piece and slides in-and-out

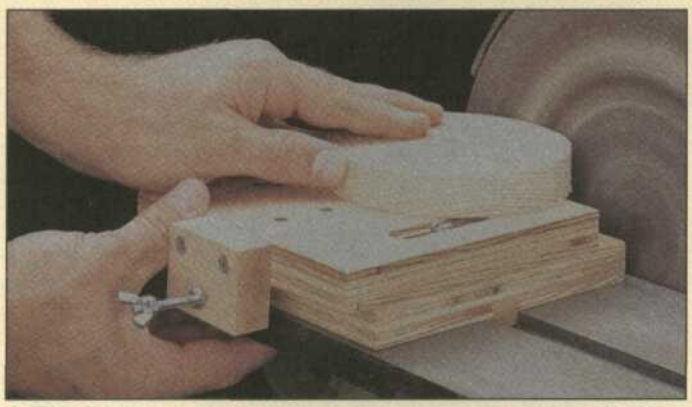

A *This jig allows you to accurately sand a wide variety of different sized circles. And if you need several pieces the same size, the built-in stop makes it easy.*

BASE. The base (A) is nothing more than a square piece of plywood (6" x 6") with a groove in the top and bottom, see Fig. 1. The groove in the top side is ¾"-wide and centered on the width of the piece. But the groove in the bottom side is cut to match the width of the miter gauge slot. Note: Locate the bottom groove so the front edge of base will end up ¼" away from the sanding disc, see detail in Fig. 2. Then cut a runner (B) to fit and glue it in place.

TOP. Attached to the top of base is another sliding table. The top table slides in and out and allows you to feed the workpiece into the spinning disc.

The top (C) is the same size as the base (A) and has a centered groove cut in the bottom side. This groove is the same size as the one you cut earlier in the top side of the base and accepts a wood runner (D), see Fig. 1.

But before the runner is glued in place a couple of counterbored slots need to be drilled in the top (C), see Fig.1. These slots allow the top to be screwed to the base and still slide in and out.

After gluing the runner (D) in place, a series of five holes can be drilled in the top. These holes are drilled 1" apart and are sized to accept an axis pin (E). Depending on which hole the pin is put in you can sand circles from 2½" to 10½" in diameter.

ADJUSTABLE STOP. One of the unique features of this jig is the adjustable stop system. It makes it easy to sand several pieces to exactly the same size. (This is especially handy if you're making toy wheels.)

Basically, the stop system consists of a block (F), a piece of threaded rod, and a T-nut. The rod passes through a hole drilled in the block and threads into a T-nut installed on the back side, see Figs. 1 and 2.

One end of the rod contacts the base and stops the top from sliding closer to the disc. Attached to the other end is a wing and jam nut. When tightened together they form a handle to make turning the rod easier. A second wing nut next to the block locks the rod in place once the diameter is reached.

USING THE JIG. To use the jig, first draw a circle on your workpiece and rough cut it to size. Next, drill a ¼" hole in the center and mount the workpiece on the axis pin.

Then with the rod touching the base, slowly back it out while rotating the workpiece against the disc until you reach the layout line. Now to set the stop, simply tighten the wing nut against the block. ❑

FEATURE YOUR JIG

If you've built an *original* jig and would like to see it featured on this page, send your idea to *Woodsmith*, Reader's Jig, 2200 Grand Avenue, Des Moines, IA 50312.

If we publish it, we'll send you $100 and a full set of *Woodsmith* back issues, with binders. (This set retails for over $300.) Include a sketch (or photo) of your jig and explain how it's used. And *please* include a daytime phone number.

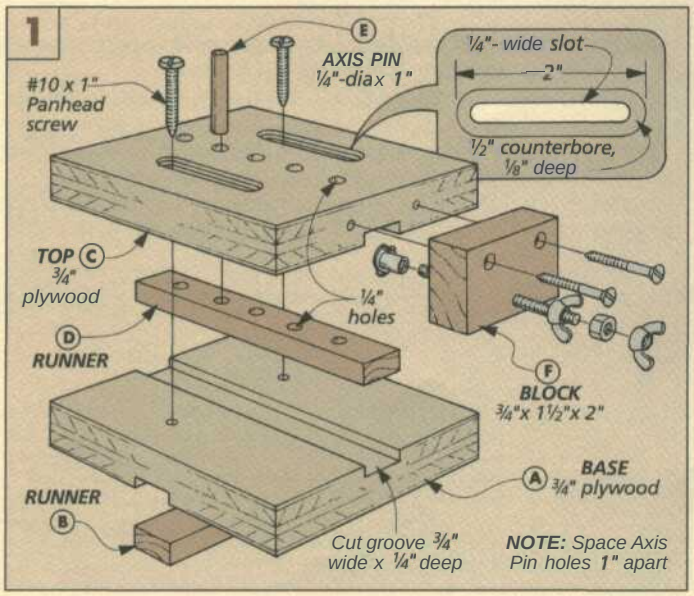

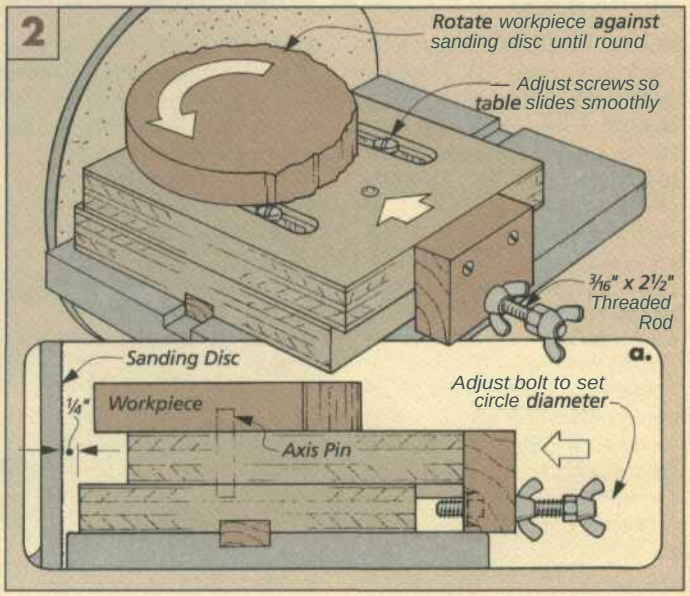

Sources

COUNTRY HUTCH

A complete hardware kit for the Country Hutch, shown on page 6, is available from *Woodsmith Project Supplies*. This kit includes all the screws you'll need, plus the following hardware:

- (8) Birch Shaker Knobs
- (4 pr.) 2" x 1⅜" Butt Hinges
- (4) Magnetic Catches
- (16) Spoon-style Shelf Supports
- (2) "Figure-8" Connectors
- (2 pr.) 16" Full-extension Drawer Glides

W96-796-100 Country Hutch Hardware Kit.....$49.95

Note: The same or similar hardware is available from some of the mail order sources that are listed below.

NOTE BOARD

The Note Board on page 18 was designed to hold a standard office calendar (8½" x 11"). The only hardware it requires is a few woodscrews. But if you wish to do the carving, you'll need the carving tool listed below.

To carve the wheat pattern on the top of the Note Board, *Woodsmith Project Supplies* is currently offering a full-size pattern.

W96-8005-650 Full-Size Wheat Carving Pattern.....$3.95

CARVING TOOL. To carve the accent on the Note Board, we tried a number of tools. The one we chose was a bent V-parting chisel. It's available from a number of sources, see below. Our tool was made by Warren Tools (Item# PPTV-2). You can order a catalog with a price list from them directly by calling the number listed below.

FINISHES

All the projects in this issue were built out of pine. Pine is hard to stain. It soaks up the stain unevenly, leaving the surface of the wood looking blotchy.

Before staining pine, I usually prepare the wood with a coat of stain controller. It limits the penetration of the stain, so the wood is colored more evenly. Stain controllers are commonly available, but they may be called wood conditioners, depending on the brand you choose.

STAINS. I used two different brands of stain For the Country Hutch, I used General Finishes' Honey Maple Sealacell, see the source listed below.

For the Note Board, I used Minwax's Colonial Maple wood stain, available at many hardware stores and home centers.

TOP COATS. I used the same top coat for all the projects in this issue: General Finishes' Royal Finish. It's available from *Woodsmith Project Supplies* and the source listed below.

W96-4003-602 Royal Finish (Satin).....$11.95 quart

FINISHING CABINET

The Finishing Cabinet on page 24 requires common hardware that should be available at local hardware stores or home centers. Or you can order a kit from *Woodsmith Project Supplies*. This kit includes everything you will need *except* for the casters (offered separately, see below). This kit includes all the screws as well as the following:

- (4) 1¼" Wood Knobs
- (12) Nylon Tack Glides
- (4) 2" x 1⁹⁄₁₆" Steel Hinges
- (2) Magnetic Catches
- (8) Shelf Supports
- (16) ¼" x 1½" Lag Screws

W96-796-200 Finishing Cabinet Hardware Kit....$12.95

CASTERS. *Woodsmith Project Supplies* is also offering a set of four 3" locking casters for the Finishing Cabinet These casters are general-duty swivel casters with a load rating of 500 lbs.

W96-796-250 Set of Four 3"-dia. Locking Casters...$39.95

ADHESIVE-BACKED SANDPAPER

In the sanding article on page 22, we mentioned the benefits of adhesive-backed sandpaper. Currently, there are several brands available, see sources below.

The adhesive is designed to be attached to a special fabric. Some newer sanders have this special fabric on them already. But if you have a sander with a rubber or felt base, you'll need to add a conversion facing to the pad on your sander.

Note: Once you stick the facing to the pad of your sander, it's pretty much on for good. But you can still use standard sandpaper. Simply place the sandpaper over the facing and clamp it in place as usual.

Woodsmith Project Supplies is currently offering adhesive-backed sandpaper. It comes in 4½"-wide rolls that are 10 yards long. The Conversion Facing is 4½" x 11" but can be cut to size.

W96-768-310 80 Grit $14.95
W96-768-320 100 Grit $14.95
W96-768-330 120 Grit $14.95
W96-768-340 180 Grit $14.95
W96-768-350 220 Grit $14.95
W96-768-600 Conversion Facing.....$3.95

CIRCLE SANDING JIG

On page 30, we showed a jig that can be used to sand circles on a disc sander. To build this jig, you'll need some scrap pieces of hardwood and plywood, plus the following supplies:

- (1) #10-32 T-nut
- (1) #10-32 Nut
- (2) #10-32 Wing nuts
- (1) #10-32 x 3" Threaded Rod
- (2) #8 x 1¼" Fh Woodscrews
- (2) #10 x 1" Panhead Screws
- (1) ¼" x 1" Dowel

WOODSMITH PROJECT SUPPLIES

ORDER BY MAIL

To order by mail, use the order form that comes with the current issue. The order form includes information on sales tax as well as shipping and handling charges.

If the mail order form is not available, please call our Toll Free number at the right for more information on specific charges and any applicable sales tax.

ORDER BY PHONE

For fastest service use our Toll Free order line. Open Monday through Friday, 7 AM to 7 PM Central Time.

Before calling, please have your VISA, MasterCard, or Discover Card ready.

1-800-444-7527

Note: Prices subject to change after February, 1995

MAIL ORDER SOURCES

Similar hardware and supplies may be found in the following catalogs. Please call each company for a catalog or information.

Cherry Tree Toys
800–848–4363
Shaker Knobs

Garrett Wade
800–221–2942
Adhesive-Backed Sandpaper

Woodcraft
800–225–1153
Shaker Knobs, Adhesive-Backed Sandpaper

Constantines'
800–223–8087
Adhesive-Backed Sandpaper

Highland Hardware
800–241–6748
Adhesive-Backed Sandpaper

The **Woodworkers' Store**
800–279–4441
Hutch Hardware, Adhesive-Backed Sandpaper, General Finishes

Warren Tools
914–876–7817
Carving Tools

Wood Carvers **Supply, Inc.**
800–284–6229
Carving Tools

The Woodcraft Shop
800-397-2278
Carving Tools

Final Details

Carved Note Board

A *To give a decorative accent to our Note Board (see page 18), we added a simple wheat carving. This requires just one inexpensive carving tool (and a utility knife). A step-by-step technique article begins on page 20.*

Country Hutch

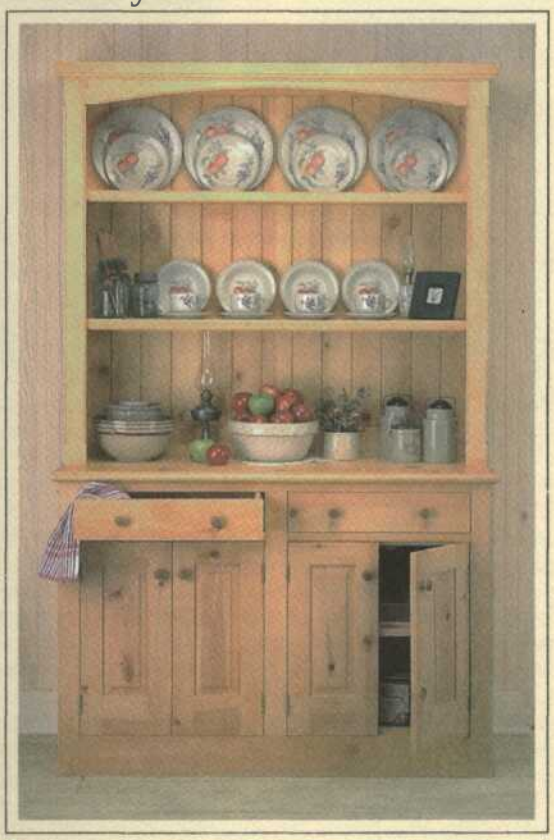

A *Inexpensive pine lumber and straightforward joinery are combined to make this classic Country Hutch. Complete step-by-stepplans begin on page 6.*

Finishing Cabinet

A *It seems a lot of "finishing"time is spent rounding up the supplies and finding a clean surface to set the project on. This cabinet (page 24) keeps everything in one place. And the top rotates to make finishing easier.*

A *Creating interesting details like these coves and roundovers on the Country Hutch is easy. All you need is a router and a couple of common bits.*